

Graphic Identity & Sign Guidelines Manual

Draft January 2017

Erie to Pittsburgh
Trail Alliance

EriePittsburghTrail.org

Copyright Erie to Pittsburgh Trail Alliance, Inc.

Table of Contents

General

Introduction 1.1
Funding Sources 1.2
Getting Started 1.3

Graphic Identity Guidelines

Erie to Pittsburgh Trail Alliance 2.1
PennDOT Approved Signs on State Owned Roads 2.2
Federal Signs 2.5
Individual Trail Logos 2.6

General Graphic Specifications

Typefaces 3.1
Symbols - Amenities and Services 3.2
Symbols - Prohibitory 3.3
Symbols - Americans with Disability Act (ADA) 3.4
Colors, Finishes, and Materials 3.5

Typical Sign Locations

Single Parking Area 4.1
Double Parking Area 4.2
Trail Junctions 4.3

Access Area Sign Guidelines

Identification 5.1
Rules and Etiquette 5.4
Information Kiosk 5.9
Town Story 5.12
Trail Map 5.14
Roofed Message Boards 5.17

On Trail Sign Guidelines

Trail Destinations 6.1
Trail Intersections 6.4
Town Amenities 6.10
Special Feature Identifier 6.13
Special Feature Post 6.16
Mile Markers 6.19
Trail Blazer 6.21
Heritage/Interpretive 6.23

Roadway Sign Guidelines

Supplemental Wayfinding 7.1
Reverse Wayfinding 7.4
EPTA Logo Signs on State Owned Roads 7.7
Sharrows 7.9

Appendix

Sign, Post and Kiosk Vendors 8.1
Cost Estimates and Comparisons 8.2
Tourist Oriented Destination 8.3
PA Bike Routes 8.4

INTRODUCTION

Signs of progress

The Erie to Pittsburgh Trail (EPT) is entering a new stage now. Longer sections of trail are coming together and it is now possible to plan multi-day trips on the trail. Assisted by the Trail Town Program, an economic development initiative of The Progress Fund, it has the opportunity to show visitors that it is maturing into a smart, well-appointed trail system. Trail users need and expect signage: to lead them to trail access areas; for rules and regulations; to describe the history and heritage of the region; to direct them to town services; and to orient and educate visitors.

The Trail Town Program, in partnership with the Allegheny Trail Alliance (ATA) member organizations and several participating communities, embarked on a project in 2008 to redefine signage on the Great Allegheny Passage, both in terms of message and design.

The Allegheny Trail Alliance has graciously allowed the Erie to Pittsburgh Trail Alliance to build on that effort. The Erie to Pittsburgh Trail Alliance (EPTA) gratefully acknowledges that this manual is adapted directly, with permission, from the ATA manual. Changes have been made by the EPTA Signage Committee to replace the ATA fonts, logos and colors with the EPT fonts, logos and EPT colors. We thank them for allowing us to do that.

The EPTA signage project had several goals:

- Make it easy for trail users in western PA to use trail signage;
- Eliminate the need for trail users to learn a new sign language every time they visit a new trail;
- The sign panels and structure would be as "green" as possible within pricing constraints;
- Structures would be designed so that volunteers could build them if trail organizations wished to assume that responsibility in-house;
- Sign structures would be simple and clean in order to not detract from the beauty of the trail's natural landscape or town streetscapes.
- Structures would require minimal maintenance and last a long time.

We anticipate that the new signs will be added to the trail corridor incrementally, over a period of years. There may be opportunities to bundle the production of several signs under single contracts, but the trail organizations may produce these signs at their own pace, depending on need and resources available. Future trail users will benefit from these efforts, and it will enhance their experience on the Erie to Pittsburgh Trail.

Adopted as Draft by Board of the Erie to Pittsburgh Alliance on January 18, 2017

The EPTA Signage Committee

FUNDING RESOURCES

For trail and trail town improvement projects

This is a list of funding resources. Not all of them would be willing to support a signage project. For a brief description of the projects that they will typically support, visit the page http://private.eriepittsburghtrail.org/funding/

The Progress Fund
www.trailtowns.org
The Erie to Pittsburgh Trail Alliance
www.EriePittsburghTrail.org
Trail Volunteer Fund
www.they-working.org
FreeWheeling Easy
www.FreeWheelingEasy.com
PeopleForBikes Community Grant Program
www.peopleforbikes.org/pages/grant-guidelines
Keep PA Beautiful
www.keeppabeautiful.org/GrantsAwards/25in25.aspx
PNC Foundation Charitable Trusts
www1.pnc.com/pncfoundation/foundation_overview.html
Northwest Greenways Block Grant Program
www.northwestpa.org/greenways-block-grant-program
RECTAP
prps.org/resources/documents/RecTAPPamphlet.pdf
Get Outdoors PA grant
prps.org/resources/documents/2017GOPAMiniGrantProgramFactSheet.pdf
PRPS Regional Trail Workshop grant
prps.org/resources/resources-grants-funding.html
C2P2 (PA DCNR) Trail grants
www.dcnr.state.pa.us/cs/groups/public/documents/document/dcnr_20030108.pdf
PennDOT Transportation Alternatives Program
spportal.dot.pa.gov/Planning/AppReg/Pages/default.aspx
Greenways, Trails and Recreation Program (PA DCED) grants
www.newpa.com/programs/greenways-trails-and-recreation-program-gtrp
Appalachian Regional Commission
www.arc.gov/funding/ARCGrantsandContracts.asp
REI Community Outreach grants
www.rei.com/stewardship/community/non-profit-partnerships-and-grants.html
Allegheny County Regional Asset District grants (ARAD)
www.radworkshere.org/pages/grant-program

Your organization doesn't have to go it alone. There are many resources available to organizations seeking to improve the towns and trails of the Erie to Pittsburgh Trail.

These grantors have varying aims and goals that are reflected in what they will typically support. It is critical that you read the grant application to ascertain if what you want to do is in agreement with those goals.

Most programs have a person with whom you can discuss your project and who will guide you on the best way to approach the application.

GETTING STARTED

How to use these guidelines

This Signage Guidelines Manual is intended to provide organizations managing trails along the Erie to Pittsburgh Trail (EPT) and organizations managing connecting trails along the EPT with uniform sign types and specifications that address most wayfinding, identification and usage issues. Liberties may be taken with installation methods and with materials (such as wood vs. plastic composite post materials) as long as the style, dimensions, colors, fonts etc. remain consistent with the examples shown in the manual. It is the decision of each trail organization as to which sign types will be implemented and whether to replace existing signs.

As these are guidelines, trail groups are not required to use them, but are highly encouraged to do so.

While member trail organizations are not required to implement the full family of sign types, there are advantages to proceeding with the recommended pre-designed samples. Advantages include the following: (a) trail users will clearly recognize that the segments are part of an integrated trail network; (b) trail users will become curious about and want to experience the full EPT network; (c) trail organization's time and expenses for sign design and engineering will be reduced; (d) EPT materials and promotion will include visuals from various segments yet still visually encourage the overall trail network; and (e) potential grantors will be more likely to subsidize implementation based on the approved EPTA Sign Guidelines Manual.

These guidelines are divided into eight sections.

Section 1, including this page, provides general background and overview information. Don't skip these pages!

Section 2, Logo Guidelines, presents the various color and style formats of the Erie To Pittsburgh Trail Alliance.

Section 3, General Graphic Specifications shows detailed information about general graphic elements including type fonts, arrows, symbols, and colors. Look for codes on the fonts and colors pages—they are referenced later.

Section 4, Sign Location Guidelines, includes typical access area plans and shows where trail signs should be located. Your location is probably similar to one of these plans.

Sections 5, 6, and 7 show how to use, build, and lay out graphics for each sign in the Erie to Pittsburgh Trail sign family.

Section 8, Standards, explain the PennDOT and ADA standards.

For each sign type, there are typically three guide pages.

The **Sign Overview Page** explains the purpose of the sign and where it is typically used.

The **Construction Specifications Page** shows how to build the sign and what materials and fasteners are needed.

Note: The sign post structures are simple enough to be made by trail groups with basic carpentry skills and access to standard shop tools. However, they may also be ordered direct from a qualified sign fabricator.

The **Graphic Specifications Page** shows how to lay out a sign's graphic message(s) and how to produce the graphic panel. Remember, fonts and colors are keyed by code to Section 3!

Note: Most graphic panels should be produced by a qualified sign fabricator. For a current list of sign fabricators that have been used by trail organizations, see the web page signmanual.eriepittsburghtrail.org/vendors.

GRAPHIC IDENTITY GUIDELINES

Logo overview: Erie to Pittsburgh Trail Alliance

Official Logo Format





Official Logo Colors

EPT Light Green
Paint or screen print to match
PMS 368 C
C=65, M=0, Y=100, K=0

EPT Dark Green
Paint or screenprint to match
PMS 349 C
C=90, M=12, Y=95, K=40

EPT Blue
Paint or screen print to match
PMS 307 C
C=100, M=22, Y=1, K=18

EPT Dark Red
Paint or screenprint to match
PMS 506 C
C=35, M=91, Y=62, K=32

EPT White
Print or screen print to match
PMS White

EPT Gray
Print or screen print to match
C=53, M=46, Y= 45, K=11

Height to width ratio
The height of the logo is 1.171 times the width of the logo.

Some common sizes are:

2 x 3.4 - used on mile markers.

6 x 10.5 - used at the top of many sign posts.

12 x 20.9 - used as trail blazers on a pole with arrow and direction

The Erie To Pittsburgh Trail graphic identity is the most essential aspect of the trail brand. It establishes the Erie to Pittsburgh Trail as a unified and significant trail system and as such encourages greater trail use as well as tourism in the adjacent communities

Logo Use
The two standard logo formats at left are the only two approved identifying marks for the Erie To Pittsburgh Trail, and should always be used in accordance with the guidelines written in this document. For a complete description of the Erie To Pittburgh Trail Alliance's policy on logo use by member and non-member organizations, please visit *EriePittsburghtrail/administration /logo-use-policy*.

Registration Mark
The trade mark [TM] must accompany the logo on all applications unless the application cannot accommodate the mark, such as on dimensional signage.

Color Palette The official colors of the Erie to Pittsburgh Trail logo are listed at left, along with their Pantone Matching System (PMS) numbers and CMYK formulas. Whenever possible, use only these match numbers or formulas to maintain a consistent brand appearance.

Reproduction
When reproducing any Erie to Pittsburgh Trail logo, always use original digital files from the Erie to Pittsburgh Trail website. Please do **not** reproduce copies or use low-resolution digital files (.jpeg, .gif, .png, etc). Also, do **not** make changes to the original artwork except to change size. Wherever possible, use artwork with the .ai or .eps extensions to avoid quality loss when re-sizing the logo.

Erie to Pittsburgh Trail Logo
On State Owned Roads



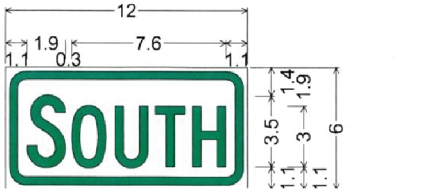

Table of distances between letter and object lefts.

1.1	S 2.2	O 2.2	U 1.9	T 1.9	H 1.6	1.1

1.0" Radius, 0.4" Border, 0.2" Indent, Green on White;
"N" C 80% spacing;
"ORTH" C 70% spacing;
1.5" Radius, 0.4" Border, 0.2" Indent, Green on White;
"ERIE TO" B;
"PGH TRAIL" B 80% spacing;
1.5" Radius, 0.4" Border, 0.2" Indent, Green on White;
Standard Arrow Custom 8.4" X 3.5" 180°;
Table of distances between letter and object lefts.

1.0	N 2.4	O 2.2	R 1.9	T 1.9	H 1.6	1.0	
2.2	E 1.1	R 1.2	I 0.6	E 2.7	T 1.1	O 0.9	2.2
2.1	7.8	2.1					
1.1	P 1.1	G 1.2	H				
	2.8	T 1.0	R 1.1	A 1.3	I 0.5	L 0.8	1.1
1.8	8.4	1.8					

Color PMS Numbers are:
PMS 307 Blue
PMS 349 Dark Green
PMS 368 Light Green

Font is Series B.

Because this version has the trail name in letters against the white background, there's no brown such as used on the standard EPT logo.

Also notice that there is not a trademark symbol on this version, because the normal lower right spot where the TM goes is not part of the image since the logo is in effect turned into an oval on a white rectangular background.

Standard Federal/PennDOT Highways Signs
Share the Road, Sharrows and Others

The most recent edition by the Federal Highway Administration (FHWA) of the Manual of Uniform Traffic Control Devices (MUTCD) was published in 2009 with Revision Numbers 1 and 2 incorporated, dated May, 2012. Chapter 9-B is devoted to signs for bicycle facilities and other trails. You may refer to the MUTCD at mutcd.fhwa.dot.gov. You'll find examples for just about any situation in this Manual.

Sharrows and Bike Lane markings. These are street markings painted or affixed as decals onto the road surface itself. Generally speaking, the sharrow consists of a pair of chevrons combined with a bike symbol. See Section 7.7 for details about this marking.

Figure 9C-9. Shared Lane Marking

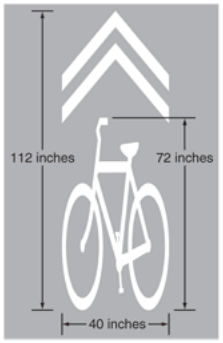

Figure 9C-3. Word, Symbol, and Arrow Pavement Markings for Bicycle Lanes

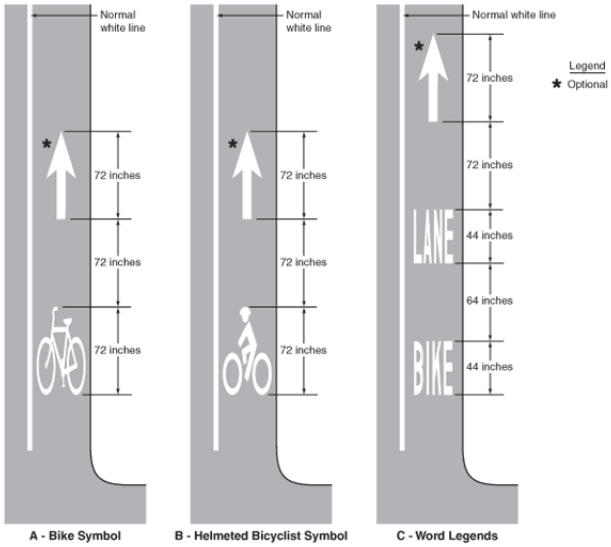

Share The Road Signs. A style of signage/markings used in Pennsylvania to delineate that a particular stretch of road has a high probability of carrying both bicycles and other vehicles varies in relation to the population density and vehicle volume for that road. In the past a simple black-lettering-on-yellow diamond shaped sign saying *Share the Road*, including the silhouette of a person on bicycle plus a car, or just the silhouette of a bicycle has been used. The 2009 MUTCD has replaced this with a *May Use Full Lane* sign. Studies have shown that this sign conveys the message in a clearer, more understandable way. See Section 7.7 for more information about signs on state owned roads.







R4-11

Throughout this manual many signs have the Erie to Pittsburgh Trail logo on the top, over the message. Those trails that are not on the main stem of the Erie to Pittsburgh Trail shall replace the Erie to Pittsburgh Trail logo with their logo. Those trails on the main stem of the Erie to Pittsburgh Trail shall use the EPT logo.

The next few pages specify the logo and proportions (height to width) for each trail which has an individual logo. When replacing the EPT logo, reduce the size of the trail's logo, so it will fit in the space of the ETP logo.





Members not on the Spine of EPT, Use of EPT Logo

In order to convey the cachet of being a part of a larger trail system, those trails that are a member of the EPTA could add an additional sign with the phrase "*Member of Erie to Pittsburgh Trail Alliance*" with a small size EPT logo on any sign. Typical EPT logo size would be 1.5 to 2.0 times the text height, but it may be larger. This would generally be used in conjunction with some other sign, and match the style and colors of that sign. The below sample is an example of how it might look.



GRAPHIC IDENTITY GUIDELINES

Logo Allegheny Valley Trails

Throughout this manual the Erie to Pittsburgh Trail logo is used on the signs. Those trails that are not on the main stem of the Erie to Pittsburgh Trail should replace the Erie to Pittsburgh Trail logo with their logo.



The height to width ratio of the Allegheny Valley Trails logo is: 1 to 1



The ratio of the Armstrong Trail logo is approximately:

17 wide by 11 high.

Throughout this manual the Erie to Pittsburgh Trail logo is used on the signs. Those trails that are not on the main stem of the Erie to Pittsburgh Trail should replace the Erie to Pittsburgh Trail logo with their logo.

CHAUTAUQUA RAILS TO TRAILS Take a Hike!

The height to width ratio of the Chautauqua Trails logo is: 1 to 4.5

FRIENDS OF THE RIVERFRONT®
THE TRAIL PEOPLE

The height to width ratio of the Riverfront Heritage Trail logo is approximately: 1 to 2



The height to width ratio of the Redbank Trail logo is approximately: 1 to 1

Throughout this manual the Erie to Pittsburgh Trail logo is used on the signs. Those trails that are not on the main stem of the Erie to Pittsburgh Trail should replace the Erie to Pittsburgh Trail logo with their logo.

FontLogo: CachetStd-Bold - Used for the logo text

ABCDEFGHIJKLMNOPQRST
VWXYZabcdefghijklnopqrstu
vwxyz1234567890

FontHead: Franklin Gothic Medium- Used for a major head, or single line

ABCDEFGHIJKLM-
NOPQRSTUVWXYZ
abcdefghijklnopqrstvwxyz
1234567890

FontSubHead: Franklin Gothic Medium Condensed - Used for a sub head

ABCDEFGHIJKLM-
NOPQRSTUVWXYZ
abcdefghijklnopqrstuvwxyz
1234567890

FontRunning: Franklin Gothic Book - Used for running text

ABCDEFGHIJKLM-
NOPQRSTUVWXYZ
abcdefghijklnopqrstuvwxyz
1234567890

System Typefaces
The type CachetStd-Bold was chosen for the Erie to Pittsburgh Trail logo because its curved layout wanted a non sharp edged font and spacier.

Other fonts were chosen for the sign system because they are highly legible due to sharpness, proportions, and availability in a variety of weights and styles. Rather than go though an extensive font selection process, it was decided to use the collection of fonts used by the Allegheny County Parks Department specifically Franklin Gothic.

Words should be in upper and lower case.
In headings each word, except articles, should begin with a capitalized letter.
In running text the first letter of each sentence should capitalized.

On the graphic specification pages included in these guidelines, type faces are keyed to this page with a character code. Example, fontHead

If you do not have the fonts, they can be purchased from Adobe Systems or its authorized dealers.
www.adobe.com/type

Letter spacing guidelines
When setting type for sign messages, be sure they match the appearance of letter spacing—or kerning —shown in these guidelines. Typically, kerning for sign messages in these guidelines is 25 units. A kerning unit is equal to 1/1000 of an em (the width of the capital “M”). For special secondary messages, letter spacing is 200 units. Other special cases are noted on individual drawings. Be sure to manually correct the kerning, or spacing, of characters like A, F, J, L, and T to correct for the extra white space integral to these characters.

In most cases the sign fabricator will handle the spacing. Be sure the specifications include the font.

Standard Tracking = 25 Unit
Special Tracking = 200 Units
em = Width of capital M

GENERAL GRAPHIC SPECIFICATIONS

Symbols, Amenities, and Services



https://segd.org/sites/default/files/14_segd_recreation_symbols_art.pdf

Here are some common amenity symbols that can be used on directional signs and information kiosk panels.

These were developed by the Society for Environmental Graphic Design for use in recreational facilities. They relate closely to symbols developed by the American Institute of Graphic Arts (AIGA) for transportation graphics and used by various federal agencies.

Graphic elements shown in black on this page will typically print black on a white background, or white on a black, brown, or green background.

Do not reproduce symbols from this page. Use only the digital file provided by Environmental Graphic Design https://segd.org/sites/default/files/14_segd_recreation_symbols_art.pdf There are 109 symbols in that pdf.

If you do not find the symbol you need here or at the above web site then check out the Bureau of Land Management *National Sign Guidebook,* page 101 in the July 2016 edition. https://blm.gov/style/medialib/blm/wy signs/docs.Par.21995.File.dat/NatlSignGuidebook2016.pdf There are 160 symbols in that pdf.

GENERAL GRAPHIC SPECIFICATIONS

Symbols, Prohibitory


No Smoking


No Firearms


No Campfires


No Fishing


No Littering


No Rock Collecting


No Firewood Cutting


No Climbing


No Camping


No Pets


No Motorcycles


No Horse Riding


No Parking


No Alcoholic Beverages


No Hunting

Here are some prohibitory symbols that can be used on trail regulation signs, at information kiosks, on bulletin boards, etc.

See previous page for specifications and where to find the digital files.

SYMBOLS- AMERICAN DISABILITY ACT (ADA)



Accessible parking spaces must be identified by signs that include the International Symbol of Accessibility. Signs at van-accessible spaces must include the additional phrase "van-accessible".

Signs should be mounted so that the lower edge of the sign is at least five (5) feet above the ground. This helps ensure visibility both for motorists and local enforcement officials. Above text from www.adata.org/factsheet.

This graphics and text enables individuals with disabilities to decide whether to use the trail based on the characteristics of the trail. Entities should also provide information about the accessibility of trails on websites.

Trail information signs at trailheads shall include the following:
1. Length of the trail or trail segment;
2. Surface type;
3. Typical and minimum tread width;
4. Typical and maximum running slope/grade;
5. Typical and maximum cross slope.
6. The location of the first point where the trail does not fully comply with the technical requirements for trails.

Above text from Architectural and Transportation Barriers Compliance Board (requirements on federal land).

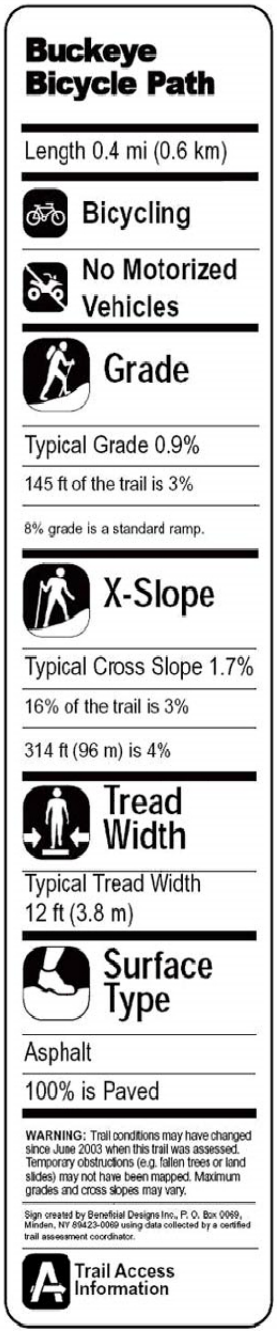

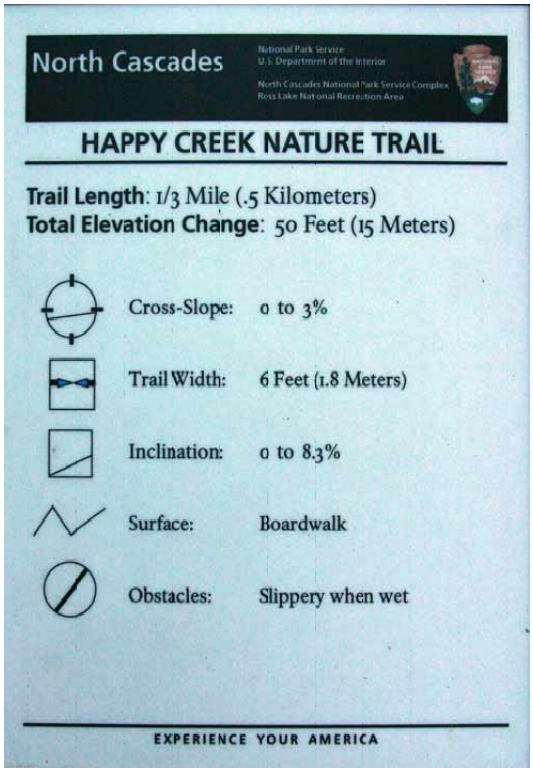



GENERAL GRAPHIC SPECIFICATIONS

Colors Finishes, and Materials

EPT Light Green
Paint or screenprint to match
PMS 368 C as indicated on drawing

EPT Dark Green
Paint or screenprint to match
PMS 349 C as indicated on drawing

EPT Blue
Paint or screenprint to match
PMS 307 C as indicated on drawing

EPT Dark Red
Paint or screenprint to match
PMS 506 C as indicated on drawing

Black
Screenprint to match PMS Black M or apply exterior grade matte black vinyl as indicated on drawing

White
Screenprint to match PMS White M or apply exterior grade matte white vinyl as indicated on drawing

Reflective White
Use 3M Scotchlite Diamond Grade 980-10 White

Highway Blue
Paint to match ASTM D4956 Standard Highway Blue

Regulatory Red
Print color digitally to match PMS 186 M

EPT Cedar
Use "CEDAR" molded recycled HDPE plastic by Plastic Lumber Yard www.plasticlumberyard.com or similar

For all signs, colors and materials are labeled with simple color nicknames (i.e., EPT Blue) on construction and graphic specification drawings. These nicknames reference this page. Here, the color nicknames are paired with a PMS (Pantone Matching System) number for matching of inks or paints, or with a standard material with integral color (i.e., white vinyl).

Sign fabricators are familiar with the Pantone Matching System and regularly match colors to it.

Paints, inks, and vinyl films to be used for signs must be of the highest quality, and specifically formulated for fully exposed exterior sign applications.

TYPICAL SIGN LOCATIONS

Example 1: Single Parking Lot

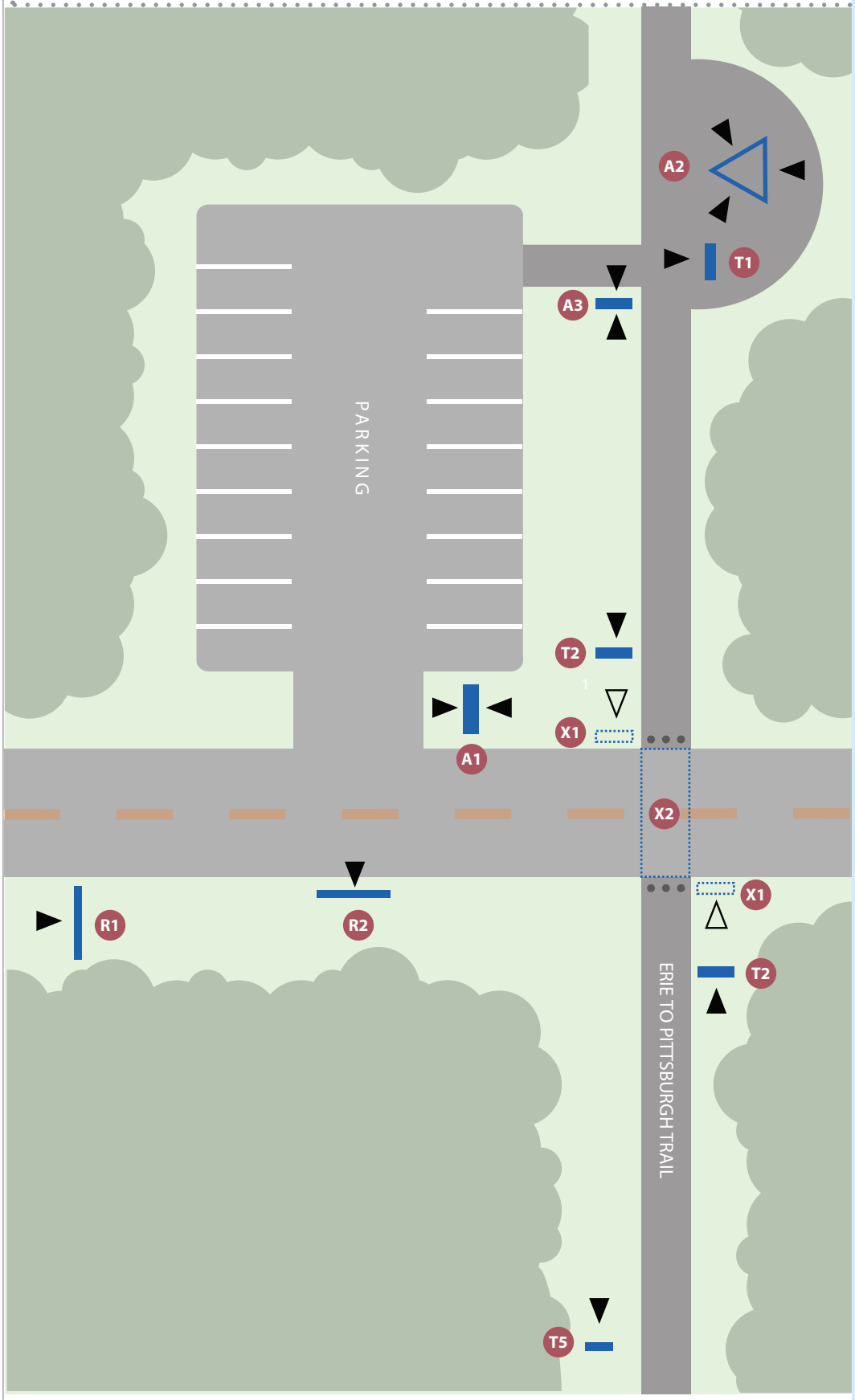

This diagram shows a typical trail access area for the Erie to Pittsburgh Trail with one parking lot. Your site condition may be a little different, so let empathy for the trail user and common sense guide the placement of signs for your project.

This diagram is not to scale and only indicates relative placement of signs to physical features. Actual sign placement will vary. Signs along roadways may be subject to local, state, or federal regulations.

Typical sign placements are described on sign overview pages which follow.

Small black triangles indicate viewing face or faces of signs.

Alphanumeric codes on the diagram correspond to the list below, the table of contents, and drawings for individual signs.

R1 Supplemental Wayfinding Sign
Typically located further from access area than shown.

R2 Reverse Wayfinding Sign

A1 Access Area Identification Sign

A2 Information Kiosk
3-Panel version shown.

A3 Rules + Etiquette Sign
May incorporate trail group recognition.

T1 Directional Sign: Trail Destinations

T2 Directional Sign: Town Amenities

T5 Mile Marker
Existing mile markers will remain. See section 6.16 for clarification.

X1 Stop Sign
Not included in these guidelines. Follow state regulations for signing bicycle pathways.

X2 Crosswalk
Not included in these guidelines. Follow state/local regulations for crosswalk applicability and design.

TYPICAL SIGN LOCATIONS

Example 2: Dual Parking Lot

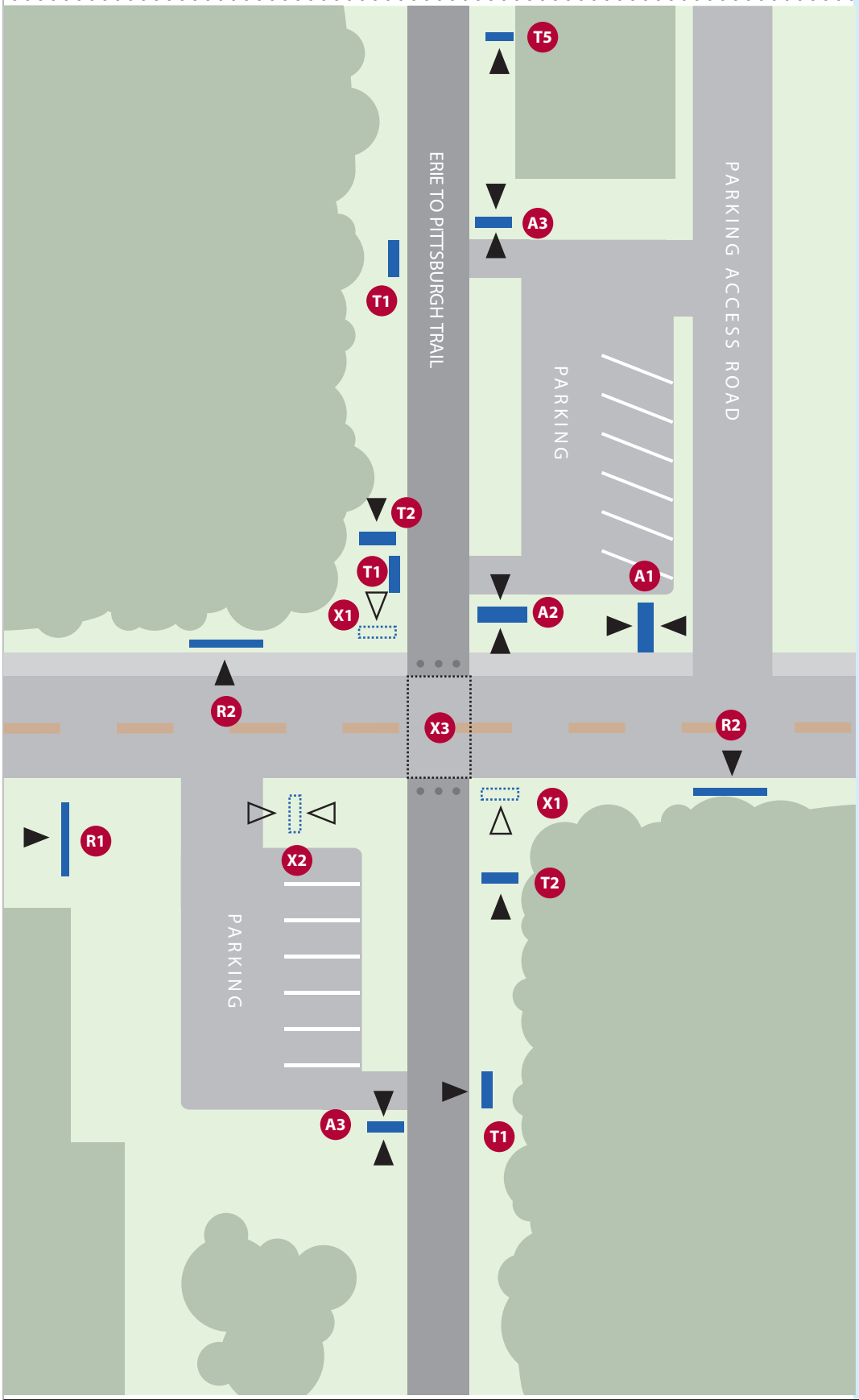

This diagram shows a trail access area with two parking lots flanking the access road.

The diagram is not to scale and only indicates relative placement of signs to physical features. Actual sign placement will vary. Signs along roadways may be subject to local, state, or federal ordinances or regulations.

Typical sign placements are described on sign overview pages which follow.

Small black triangles indicate viewing face or faces of signs.

Alphanumeric codes on the diagram correspond to the list below, the table of contents, and drawings for individual signs.

R1 Supplemental Wayfinding Sign
Further from access area than shown.

R2 Reverse Wayfinding Sign

A1 Access Area Identification Sign

A2 Information Kiosk
2-Panel version shown.

A3 Rules + Etiquette Sign
Will incorporate trail group recognition on reverse side.

T1 Directional Sign: Trail Destinations

T2 Directional Sign: Town Amenities

T5 Mile Marker
Existing mile markers will remain. See section 6.16 for clarification.

X1 Stop Sign
Not included in these guidelines. Follow state/local regulations for signing bicycle pathways.

X2 Supplemental Parking Identifier
Not included in these guidelines. Follow state/local regulations for vehicular signing.

X3 Crosswalk
Not included in these guidelines. Follow state/local regulations for crosswalk applicability and design.

ACCESS AREA IDENTIFICATION SIGN

Overview

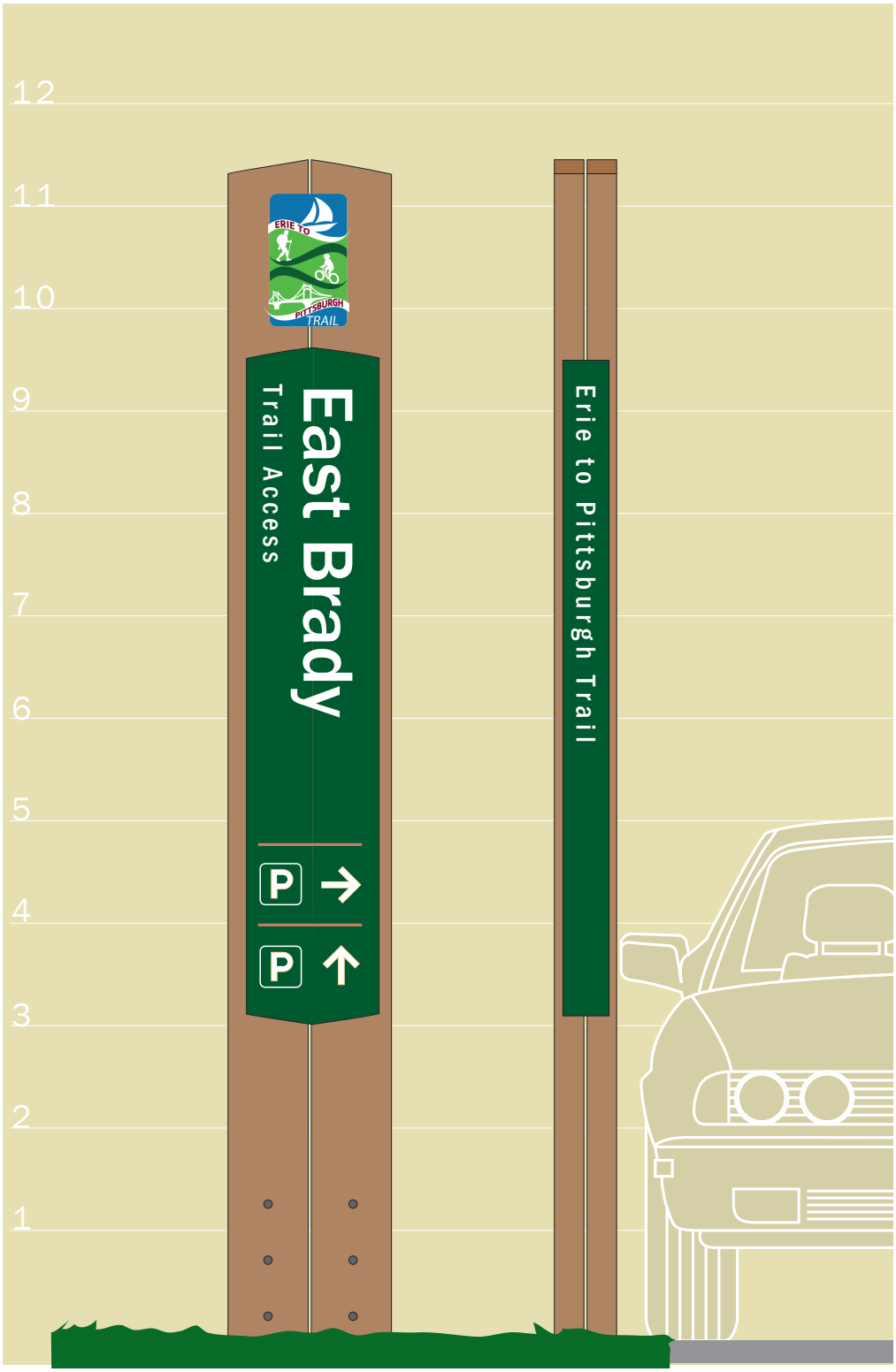

The Access Area Identification Sign announces the access area to approaching drivers and bicyclists, reinforces the Erie to Pittsburgh Trail brand with a prominently displayed logo, and provide direction to parking areas. The sign's height and unique shape provide greater visibility and recognition for approaching drivers and riders.

The sign is typically located near the parking area entrance, just outside of the public right of way. The sign should be positioned so that drivers have adequate time to turn once they see the parking directional arrow and make the decision to turn.

The example shown is for an access area with two parking lots.

The sign is double-sided with identical graphics on opposing sides, except for arrow positions.

Before installing this sign, review the design with your community planning board. It is ideal to maintain the continuity of this sign across all Erie to Pittsburgh Trail access areas; however, some community ordinances may prohibit the use of a sign of this height, or require a variance.

ACCESS AREA IDENTIFICATION SIGN

Construction

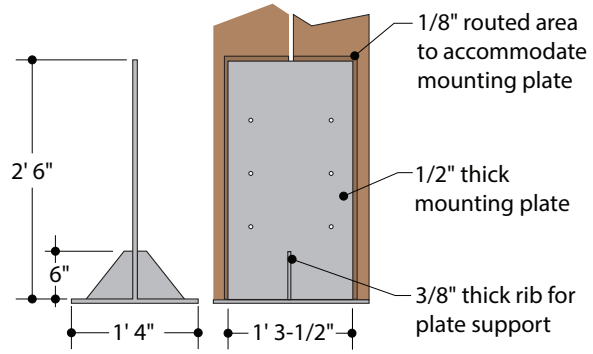

Footer Mounting Plate
Scale 1/2"=1' 0"

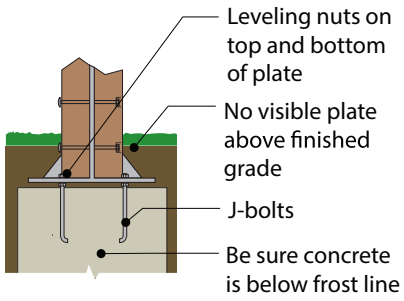

Footer Assembly
Scale 1/2"=1' 0"

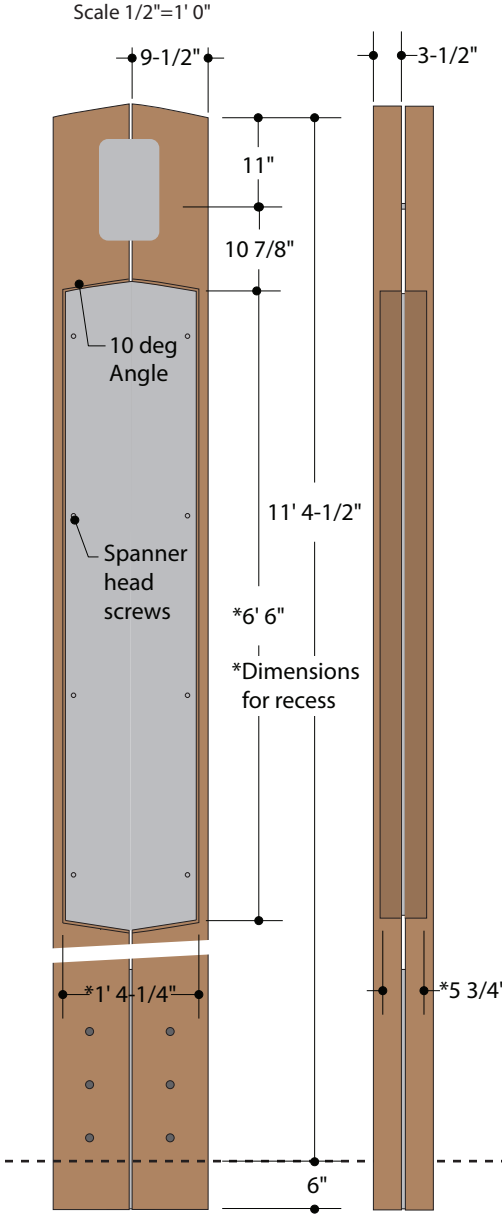

Front/Side Views, Assembly
Scale 1/2"=1' 0"

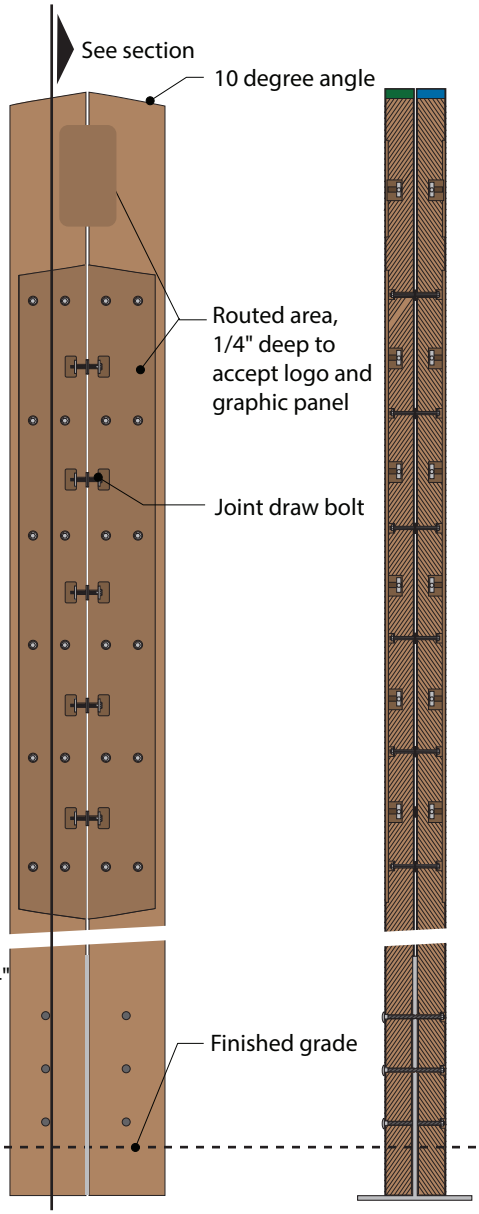

Front View, w/o Panels
Scale 1/2"=1' 0"

Section
Scale 1/2"=1' 0"

GENERAL NOTES

1 The body of this sign is made from 4"x10"x12' plastic lumber. Color/material: EPT Cedar.

2 The mounting plate is welded from steel plate. For corrosion protection, the plate must be galvanized.

3 The footer is recycled concrete poured in a round form such as Sonotube, with J-bolts inserted. Be sure the footer passes below the frost line of the installation location.

4 The footer and mounting plate must be set low enough that the mounting plate rib is just under the finished grade and not exposed.

5 By placing nuts on the J-bolts under and above the mounting plate, the plate can be adjusted level and plumb. Nuts with nylon inserts are recommended.

6 Joint draw bolts, nuts, and bolts behind the graphic panels must be countersunk or recessed in the lumber so they do not obstruct the graphic panels.

7 Washers should be placed on all attachments between the boards to maintain consistent 1/4" spacing between all boards.

8 The inside faces of boards are routed to accommodate the mounting plate while maintaining 1/4" spacing between the boards.

9 The sign is secured to the mounting plate with carriage bolts. The nuts for these carriage bolts should be countersunk and the holes covered with a cap matching the carriage bolt heads.

10 The 1/4" recesses to receive the logo and graphic panels must be free of scalloping. There must be a smooth, consistent 1/8" gap all around the installed graphic panels.

ACCESS AREA IDENTIFICATION SIGN

Graphic Specifications

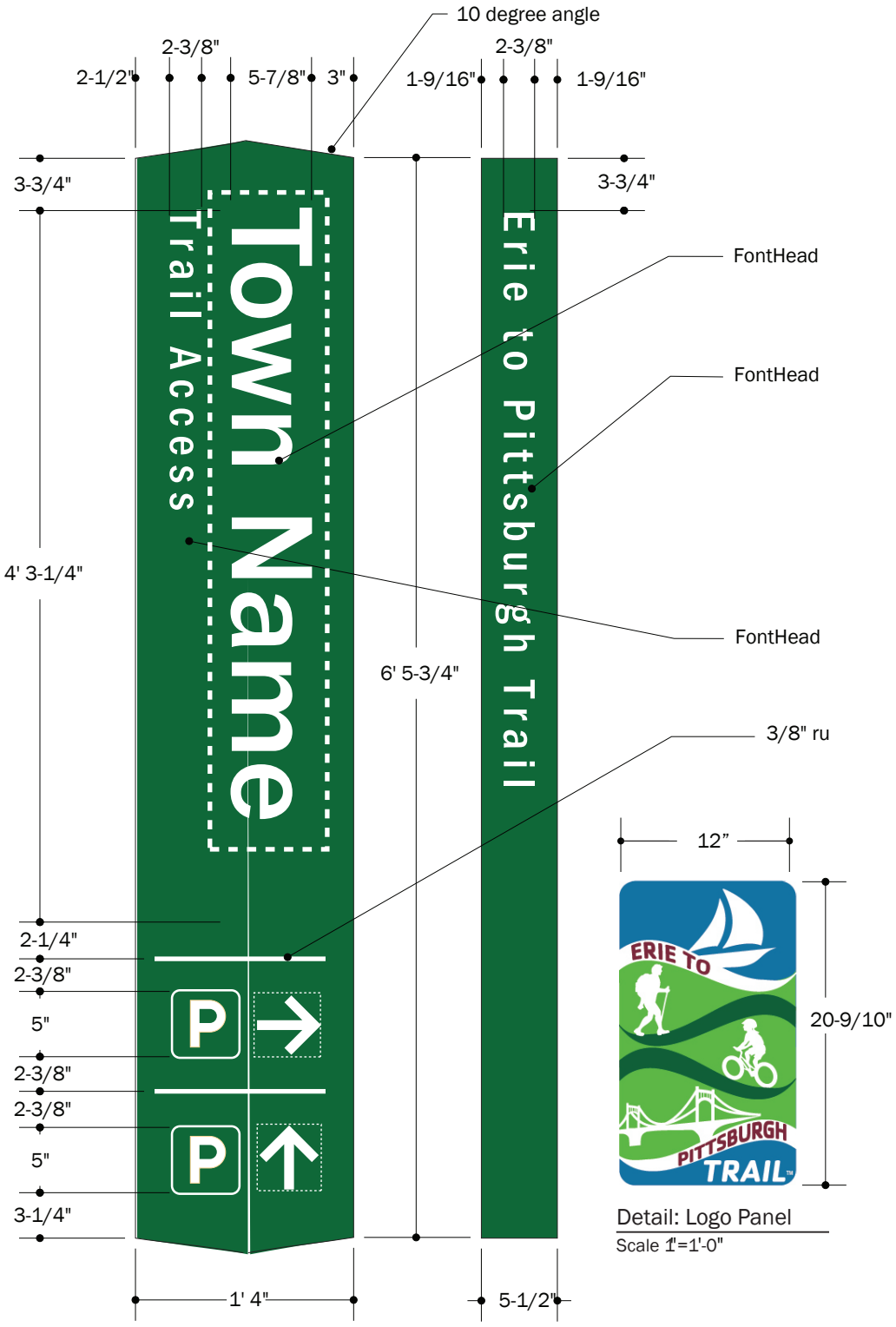

Detail: Graphic Panel 1
Scale 1"=1' 0"

Detail: Graphic Panel 2
Scale 1"=1' 0"

Detail: Logo Panel
Scale 1"=1'-0"

GENERAL NOTES

1 Graphic and logo panels are 1/8" aluminum sheet painted or powder coated or anodized with screen printed graphics and attached to the plastic sign body with spanner head screws that are painted to match the graphic panel. See construction drawing for location of screws.

2 Two of each graphic panel are required for the complete sign. Graphics on twin panels are identical, except for the position of arrows. Left or right arrows must be reversed on opposing twin panel.

3 The example shows two parking legends. This is required only where the access area has two parking areas. If there is only one parking area, the graphic panel is to be left blank below the first parking legend position.

4 Colors for the graphic panels is EPT Dark Green with EPT White lettering. Edges of the graphic panel are same as the face color. See pages 3.5, Colors, Finishes, and Materials, for complete specifications.

5 Colors for the logo panel are shown on page 2.1, Logo Overview. The edges of the logo panel are painted to match the outermost color of the logo.

6 Messages outlined in dashed boxes may change. The dashed box indicates maximum extent of copy. Other messages should not change.

RULES AND ETIQUETTE / TRAIL STEWARDSHIP

Overview



This sign is typically located near the trail access points from parking lots. One side displays trail rules and suggestions for considerate trail use. The other side recognizes trail groups and funding organizations. The sign is situated so that its faces are perpendicular to the trail, with the trail rules and etiquette side facing the access path.

The Erie to Pittsburgh Trail Logo conveys cachet of being part of a greater trail system.

The Trail Rules & Etiquette sign example on the left shows placeholder text and suggested international symbols. The text for this sign is available on the next pages.

The text should reflect the rules and circumstances of your particular trail segment. Some or all of the symbols shown in the example may not be applicable to your segment.

The Trail Support and Stewardship example on the right shows various organizations and grants that helped to fund the construction of the trail, as well as organizations and grants that support the continual maintenance of the trail segment.

The logo at the bottom would be that of the trail maintenance organization.

RULES AND ETIQUETTE / TRAIL STEWARDSHIP

Graphic Specifications

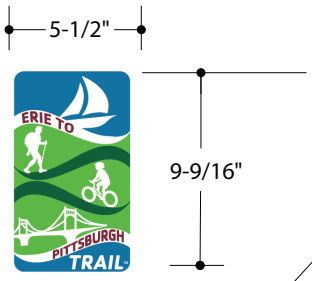

Detail: Logo Panel

Scale 1-1/2"=1' 0"

LAYOUT NOTES

For body text of both panels, set "Space Before Paragraph" to 40 points.

Prohibitory symbols are 1-1/4" wide. See page 3.4 for specifications.

*Text area can expand vertically if there is no logo below.

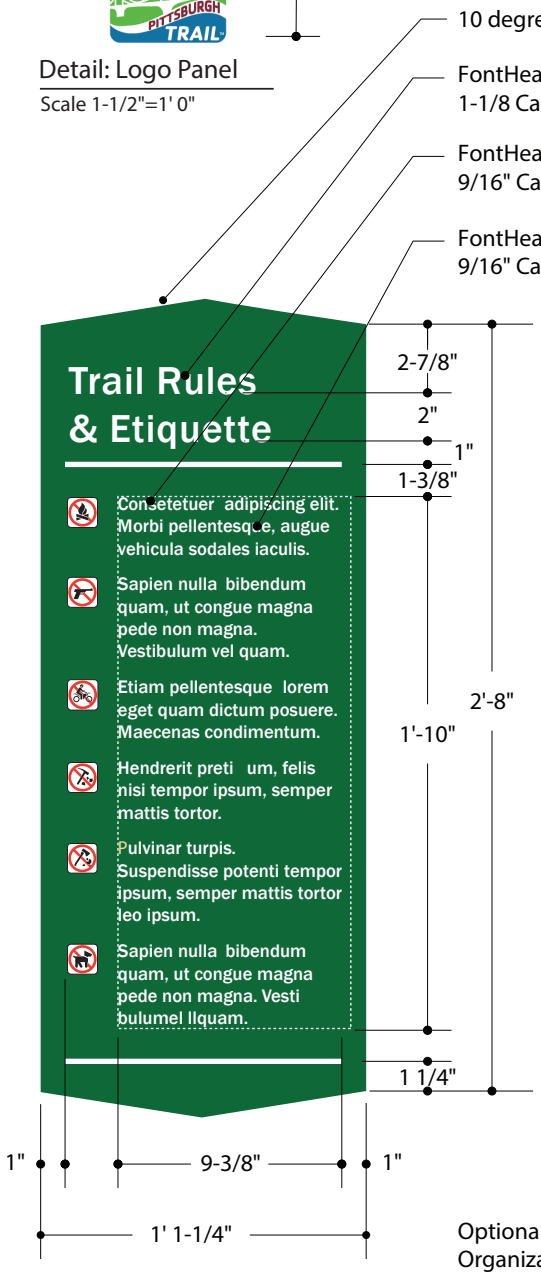

Detail: Graphic Panel 1

Scale 1-1/2"=1' 0"

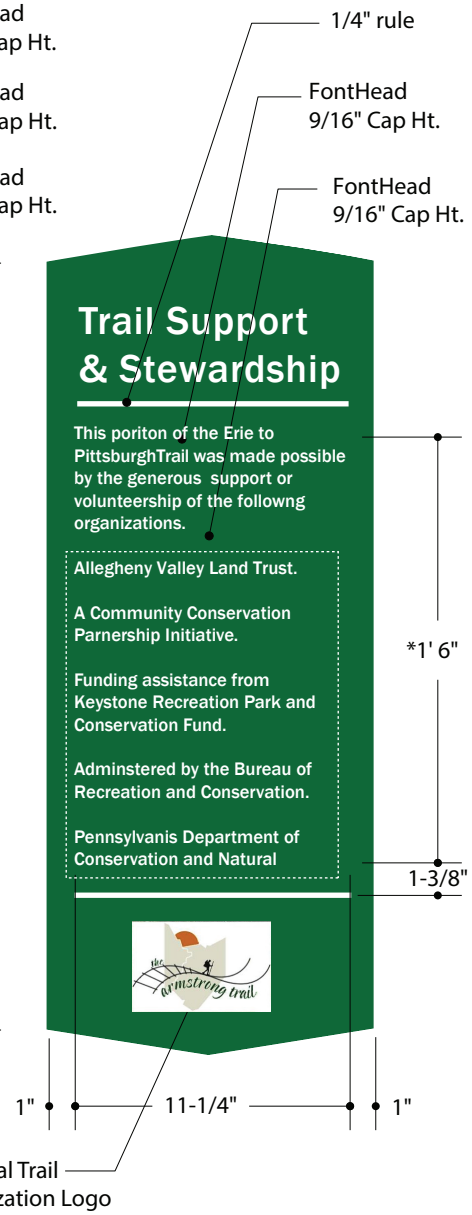

Detail: Graphic Panel 2

Scale 1-1/2"=1' 0"

GENERAL NOTES

1 Graphic and logo panels are 1/8" painted or powder coated or anodized aluminum sheet with screen-printed graphics and are attached to the plastic sign body with spanner head screws that are painted to match the graphic panel. See construction drawing for location of screws.

2 Two logo panels and one of each graphic panel are required for the complete sign.

3 Colors for the graphic panels are EPT Dark Green with EPT White lettering. Edges of the graphic panel are same as the face color. See pages 3.5, Colors, Finishes, and Materials, for complete specifications.

4 Colors for the logo panel are shown on page 2.1, Logo Overview. The edges of the logo panel are painted to match the outermost color of the logo.

5 Messages outlined in dashed boxes may change. The dashed box indicates maximum extent of copy. Other messages should not change.

6 Trail rules and etiquette should be individualized, based on trail section requirements. See pages 5.13 and 5.14

7 Trail Support & Stewardship message should be developed by the managing trail organization.

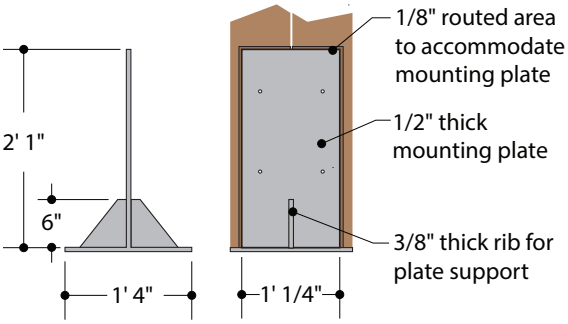

Footer Mounting Plate
Not to Scale

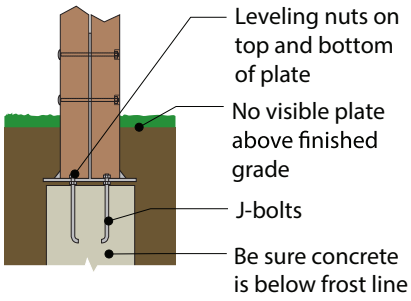

Footer Assembly
Not to Scale

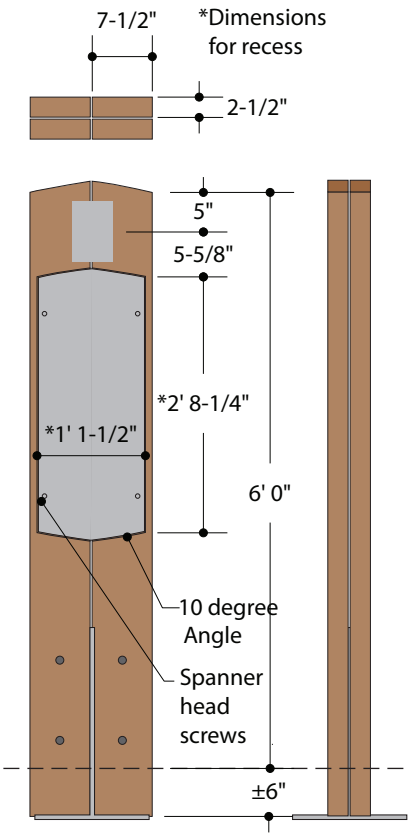

Front/Side/Top Views, Assembly
Scale 1/2"=1' 0"

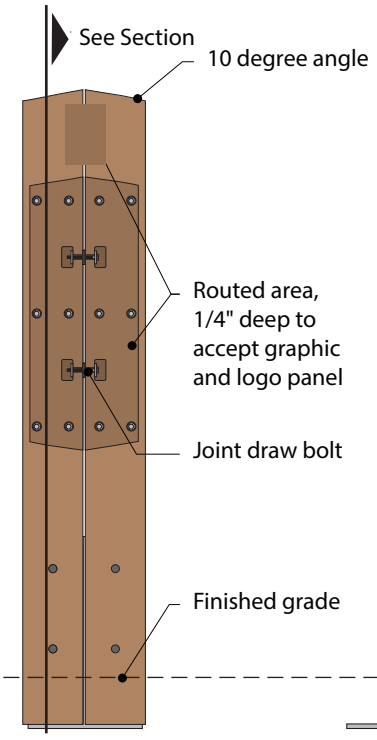

Front View, w/o Panels
Scale 1/2"=1' 0"

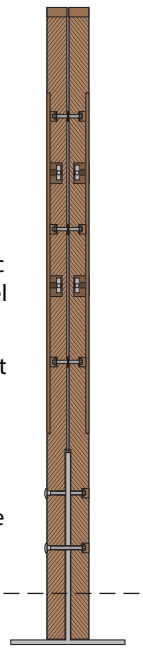

Section
Scale 1/2"=1' 0"

GENERAL NOTES

1 The body of this sign is made from 3"x8"x12' plastic lumber. Color/material: ETP Cedar.

2 The mounting plate is welded from steel plate. For corrosion protection, the plate must be galvanized.

3 The footer is recycled concrete poured in a round form such as Sonotube, with J-bolts inserted. Be sure the footer passes below the frost line of the installation location.

4 The footer and mounting plate must be set low enough that the mounting plate rib is just under the finished grade and not exposed.

5 By placing nuts on the J-bolts under and above the mounting plate, the plate can be adjusted level and plumb. Nuts with nylon inserts are recommended.

6 Joint draw bolts, nuts, and bolts behind the graphic panels must be countersunk or recessed in the lumber so they do not obstruct the graphic panels.

7 Washers should be placed on all attachments between the boards to maintain consistent 1/4" spacing between all boards.

8 The inside faces of boards are routed to accommodate the mounting plate while maintaining 1/4" spacing between the boards.

9 The sign is secured to the mounting plate with carriage bolts. The nuts for these carriage bolts should be countersunk and the holes covered with a cap matching the carriage bolt heads.

10 The 1/4" recesses to receive the logo and graphic panels must be free of scalloping. There must be a smooth, consistent 1/8" gap all around the installed graphic panels.

General Trail Users

- Open dawn until dusk
- No unauthorized motor vehicles
- Pack out what you pack in; please do not litter
- Respect private property; stay on the trail
- Access trail at designated locations
- Check the website for the OPDMD policy (Other Power Driven Mobility Devices)
- Check the website for current trail conditions or alerts
- Check the website for geocaching rules
- Trail use is at your own risk; services are limited
- Park in designated areas only; do not block residents
- Do not approach wildlife
- During hunting season (September – March) use caution; wear blaze orange
- Hunting and trapping are prohibited on the trail corridor
- Report maintenance problems or hazards to (trail office phone number, website)
- Carry a cell phone but remember that cell phone service varies from location to location
- For all emergencies call 911
- Keep note of mile markers and road crossings to advise 911 where you are
- Let others know where you are going before heading out on the trail
- Carry identification with you
- Wearing headsets is not recommended when using the trail
- Refer to trail maps for location of restroom facilities
- Show communities that trail users are friends
- Trail closures may at times be necessary due to maintenance
- No trail activity is permitted on closed sections of trail
- Carry a map – always know where you are
- Carry water for hydration
- Do not break tree limbs, pick up or damage plants growing along the trail
- Do not damage or take any piece or part of historic artifacts
- Take only pictures; leave only tracks

This is a collection of possible rules. Each trail group should select what is appropriate and enforceable for their section of trail.

The list is on two pages.

This page has rules for:
General Trail Users.

The next page has rules for:
Bicyclists
Pet Owners
Camping/Lodging
Parking
Horses
Cross Country Skiing

RULES AND ETIQUETTE / TRAIL STEWARDSHIP

Bicyclists

- Helmets are recommended
- Helmets are required by PA law for children under the age of 12
- Helmets are required by NY law for children under the age of 14
- Helmets are required by ??town?? law for all riders
- Adjust your speed according to weather conditions, traffic and ability
- Keep to the right except when passing
- Announce "passing on the left" or ring a bell
- Do not use more than half of the trail
- Do not exceed the speed limit of 15 mph (25 kph)
- Stop, look and proceed with caution at road intersections
- Pedestrians have the right of way, yield to pedestrians
- Use common sense, courtesy and caution
- Remember to always check behind you for oncoming traffic
- Use caution on bridges; surfaces may be wet and slippery
- Do not block the trail; stay to the side off the trail, when stoped
- Do not block the trail; groups should be in single file when other trail users are present
- Do not block gates; pass through without hesitation
- Check your bike for mechanical problems before starting

Pet Owners

- Leashes are mandatory; animals must be under the owner's control
- Clean up after your pets

Camping/lodging

- Camp only in designated areas
- Camp only by permit of (name and contact info of organization)
- Fires are permitted only in fire rings
- Check the website or local tourist bureau for the availability of lodging on or near the trail prior to setting out on an overnight trip

Parking

- No overnight parking
- For overnight parking, contact (name and contact info of organization)

Horses

- Horses are allowed only in designated areas
- If on a shared corridor with a gravel/dirt surface adjacent to a paved multipurpose trail, horses should not use the paved trail
- Clean up waste

Cross Country Skiing

- Walkers – please try to avoid walking in set ski tracks

This is a collection of possible rules. Each trail group should select what is appropriate and enforceable for their section of trail.

The list is on two pages.

This page has rules for:
Bicyclists
Pet Owners
Camping/Lodging
Parking
Horses
Cross Country Skiing

The previous page has rules for:
General Trail Users.

INFORMATION KIOSKS

Overview



Two-sided kiosk

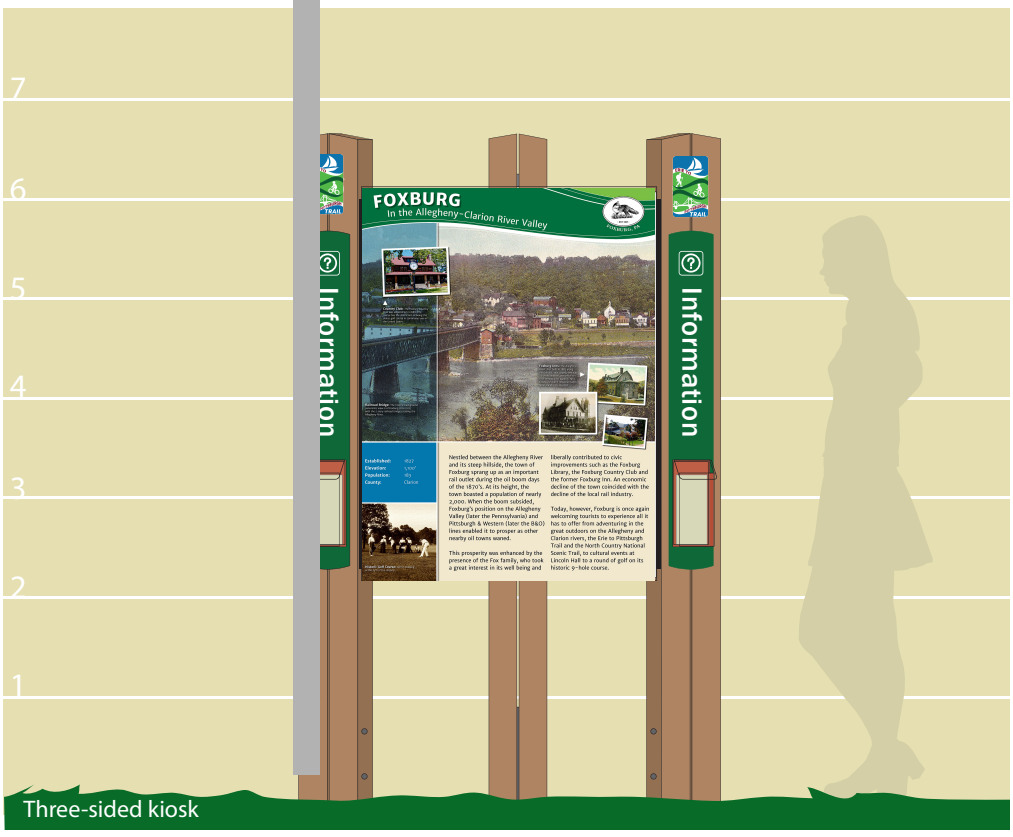

Three-sided kiosk

Information Kiosks include two and three-sided versions. Both formats employ identical post and panel details; only a metal angle strip changes to accept panels at a 90 degree angle (for two-sided), or at a 60 degree angle (for three-sided). The panels can also be mounted on a wall rather than as a standalone Kiosk.

Typically located in or near trail access areas, information kiosks can display trail town maps and business directories, town welcome messages, and regional trail maps. They can also acknowledge trail maintenance organizations and volunteers.

Brochure holders integrated with the graphic panels can hold town and trail maps.

Kiosks which include trail town maps and directories should be situated so that the town map is oriented according to the physical world.

Based on how often the information on the panel will change, there are two suggested construction methods. Trail town maps and directories may change out on an annual or semi-annual basis so a high-resolution digital printing technology on a vinyl film which is applied to a metal substrate is suitably economical. Town story and trail maps are not changed very often so fiberglass embedded panels may be appropriate.

The area below and immediately around information kiosks should be carefully landscaped to minimize maintenance burden. Consider hard materials such as concrete, brick, cobblestones, or specialty materials that will prohibit weed growth.

This area below should also be ADA accessible, which is required by some funding sources.

INFORMATION KIOSKS

Construction for Two-Sided Kiosk

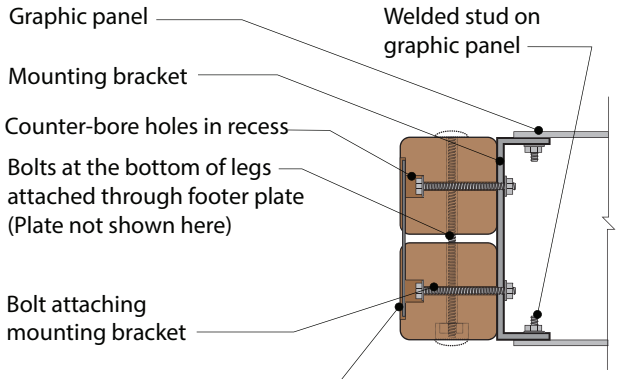

Section: Showing Hardware

Not to Scale

NOTE: Leg profile and assembly same as for three-sided kiosk; See page 5.6

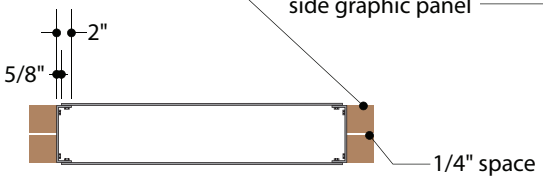

Top View, Assembly

Scale 1/2" = 1'-0"

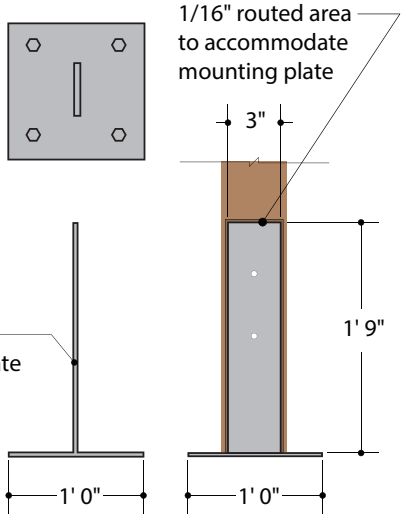

Top, Side, Front Views, Footer Plate

Not to scale

Note: The 3' width may be reduced if there is not enough space for the kiosk. Maintain the aspect ratio 3/4 of the sign panel.

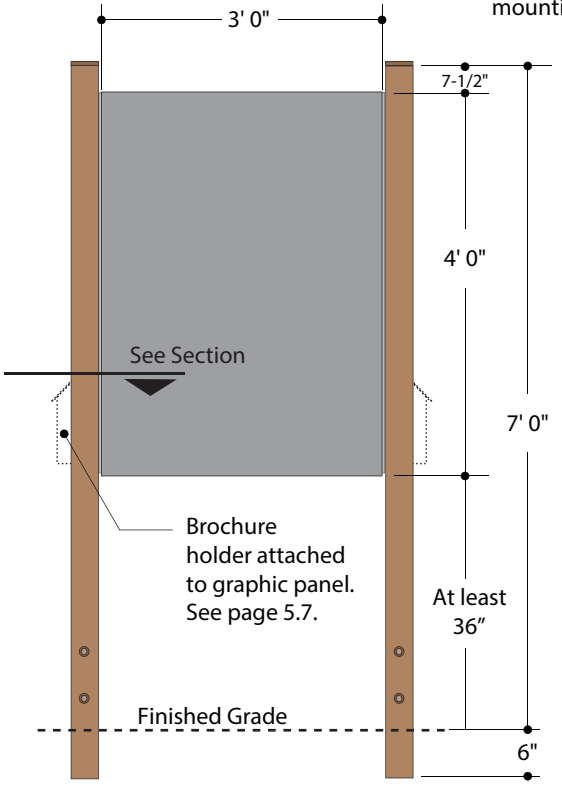

Front View, Assembly

Scale 1/2" = 1'-0"

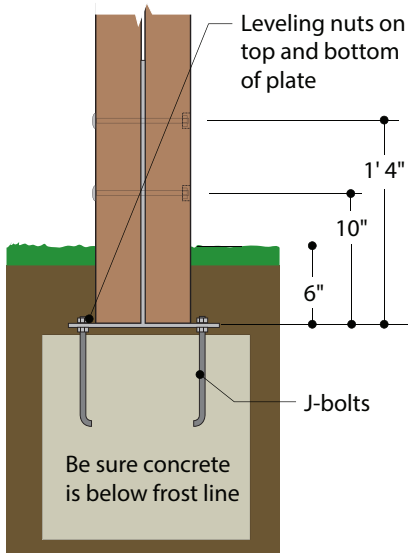

Footer Assembly

Not to Scale

GENERAL NOTES

1 Kiosk legs are made from 4"x4"x8' plastic lumber. Color/material: EPT Cedar.

2 The mounting plate is welded from steel plate. For corrosion protection, the plate must be galvanized.

3 The footer is concrete poured in a round form such as Sono-tube, with J-bolts inserted. Be sure the footer passes below the frost line of the installation location.

4 The footer and mounting plate must be set low enough that the mounting plate rib is just under the finished grade and not exposed.

5 By placing nuts on the J-bolts under and above the mounting plate, the plate can be adjusted level and plumb. Nuts with nylon inserts are recommended.

6 Joint draw bolts, nuts, and bolts behind the graphic panels must be countersunk or recessed in the lumber so they do not obstruct the graphic panels.

7 Washers should be placed on all attachments between the boards to maintain consistent 1/4" spacing between all boards.

8 The inside faces of boards are routed to accommodate the mounting plate while maintaining 1/4" spacing between the boards.

9 The sign is secured to the mounting plate with carriage bolts. The nuts for these carriage bolts should be countersunk and the holes covered with a cap matching the carriage bolt heads.

10 The 1/4" recesses to receive the logo and graphic panels must be free of scalloping. There must be a smooth, consistent 1/8" gap all around the installed graphic panels.

INFORMATION KIOSKS

Construction for Three-Sided Kiosk

Note: Brochure holders attach to face of graphic panels on posts (Not shown). See page 5.7.

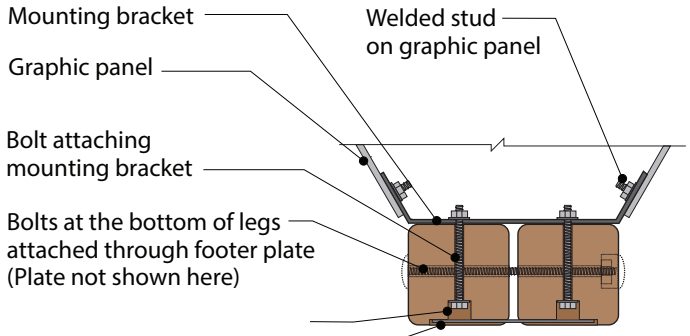

Section: Showing Hardware

Not to Scale

Note: The 3' width may be reduced if there is not enough space for the kiosk. Maintain the aspect ratio 3/4 of the sign panel.

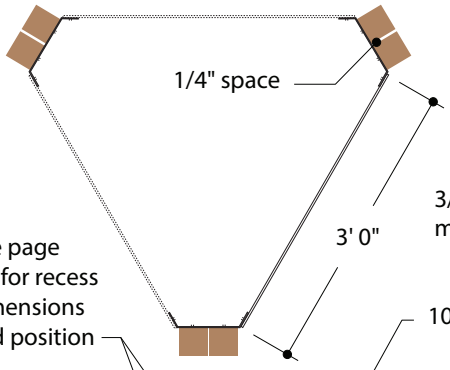

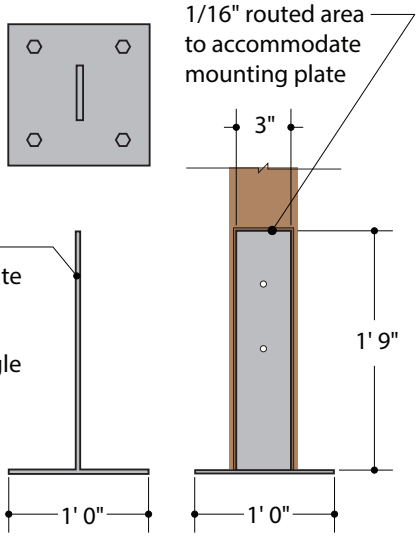

Top, Side, Front Views, Footer Plate

Not to scale

See page 5.7 for recess dimensions and position

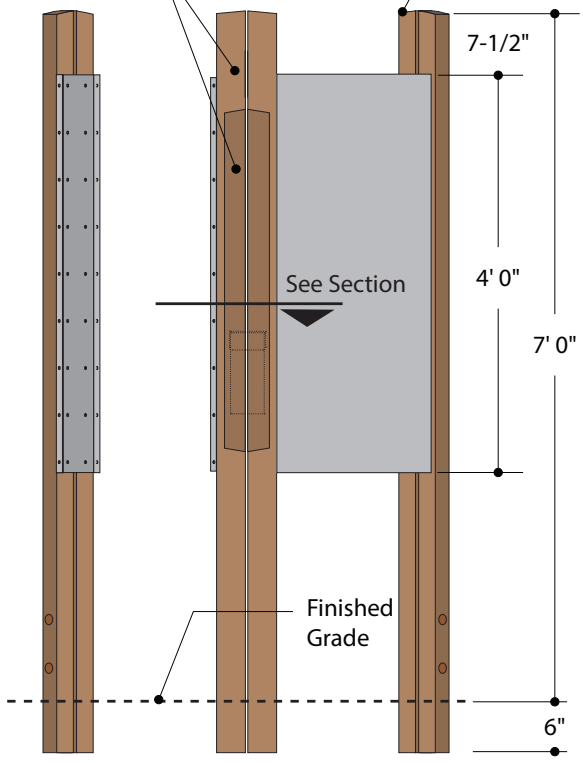

Front View, Partial Assembly

Scale 1/2" = 1' 0"

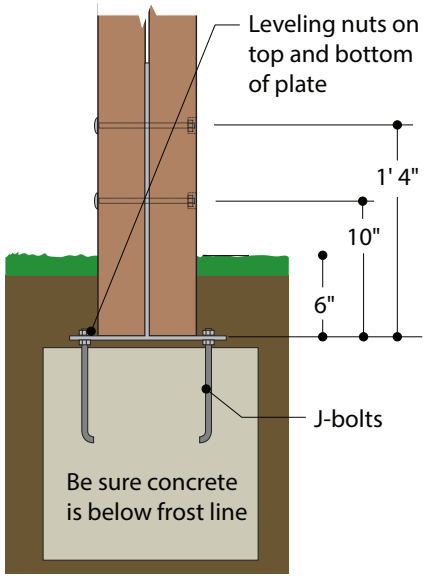

Footer Assembly

Not to Scale

GENERAL NOTES

1 Kiosk legs are made from 4"x4"x8' plastic lumber. Color/material: EPT Cedar.

2 The mounting plate is welded from steel plate. For corrosion protection, the plate must be galvanized.

3 The footer is recycled concrete poured in a round form such as Sonotube, with J-bolts inserted. Be sure the footer passes below the frost line of the installation location.

4 The footer and mounting plate must be set low enough that the mounting plate rib is just under the finished grade and not exposed.

5 By placing nuts on the J-bolts under and above the mounting plate, the plate can be adjusted level and plumb. Nuts with nylon inserts are recommended.

6 Joint draw bolts, nuts, and bolts behind the graphic panels must be countersunk or recessed in the lumber so they do not obstruct the graphic panels.

7 Washers should be placed on all attachments between the boards to maintain consistent 1/4" spacing between all boards.

8 The inside faces of boards are routed to accommodate the mounting plate while maintaining 1/4" spacing between the boards.

9 The sign is secured to the mounting plate with carriage bolts. The nuts for these carriage bolts should be countersunk and the holes covered with a cap matching the carriage bolt heads.

10 The 1/4" recesses to receive the logo and graphic panels must be free of scalloping. There must be a smooth, consistent 1/8" gap all around the installed graphic panels.

INFORMATION KIOSKS

Specifications for Post Graphics

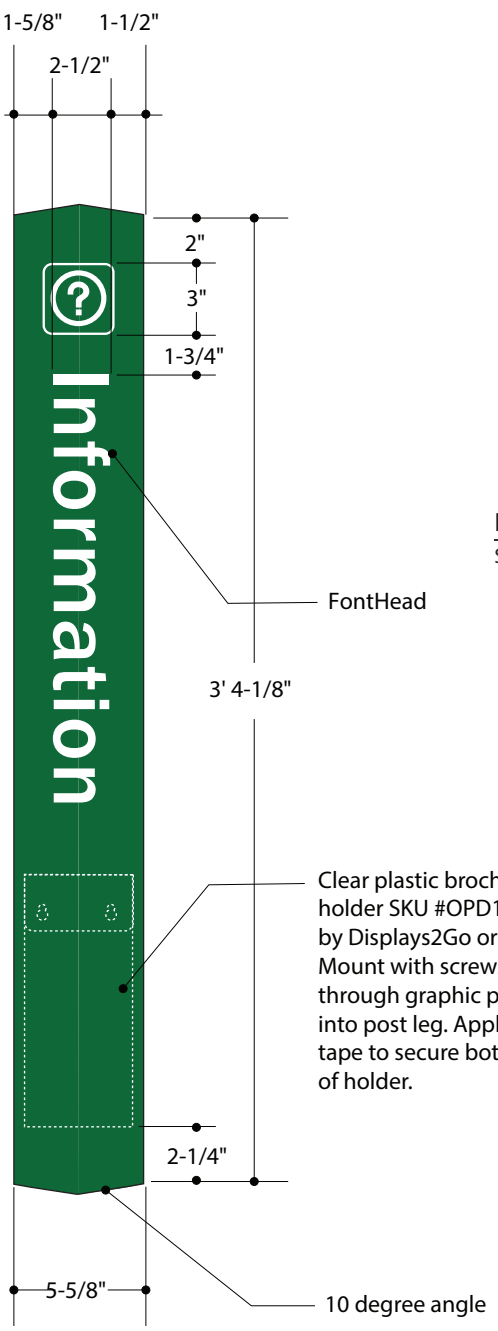

Detail: Graphic Panel

Scale 1-1/2" = 1' 0"



Detail: Logo Panel

Scale 3"=1'-0"

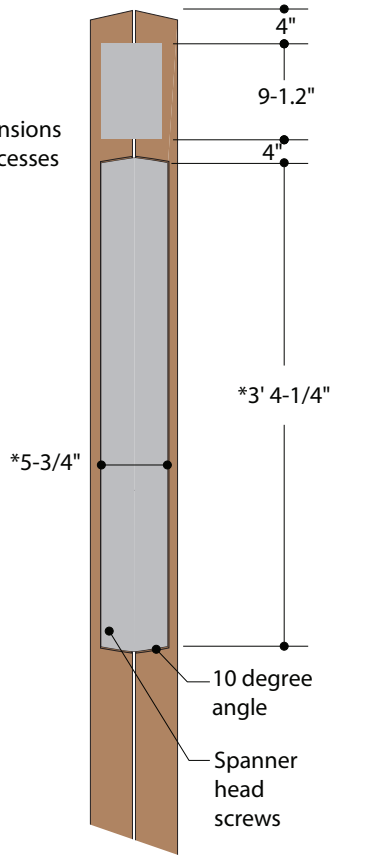

Detail: Post Layout with Panels

Scale 3/4" = 1' 0"

GENERAL NOTES

1 Graphic and logo panels are 1/8" painted or powder coated or anodized aluminum sheet with screen-printed graphics and are attached to the plastic sign body with spanner head screws that are painted to match the graphic panel.

2 Two or three sets of graphic panels are required for the complete sign. Messages do not vary from that shown.

3 Colors for the graphic panels are EPT Dark Green with EPT White lettering. Edges of the graphic panel are same as the face color. See pages 3.5, Colors, Finishes, and Materials, for complete specifications.

4 Colors for the logo panel are shown on page 2.1, Logo Overview. The edges of the logo panel are painted to match the outermost color of the logo.

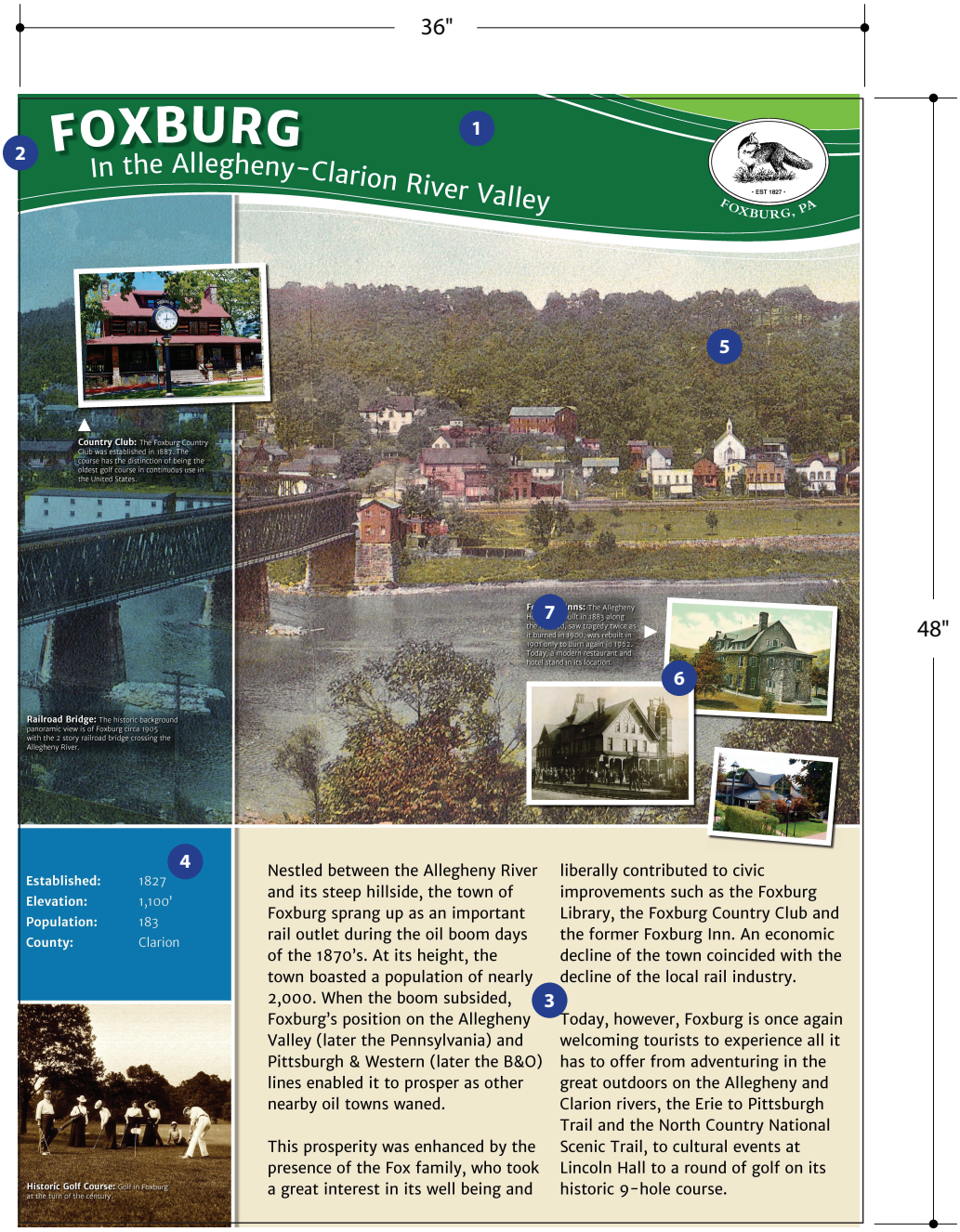

Detail: Typical Town Story Panel
Scale 1-1/2"=1' 0"

One of three standard kiosk panel types, the Town Story panel provides a glimpse of the history, culture, and perhaps commerce of the town for trail users.

1 Title header identifies the town along with a town tag line. The swoosh should be used on all panels to convey a cachet of being part of a connected system of trails. An Adobe Illustrator file for the swoosh is available on the EPTA website.

2 The Erie to Pittsburgh Logo may be placed to the left of the town name to convey a cachet of being part of a connected system of trails.

3 The body text gives historic context and identifies places of interest that trail user can see and visit today.

4 Town facts provide general, comparable context of trail towns. Town identity stamps may be added to this space in the future.

5 The background image shows regional scenery, the town skyline, or a historical image.

6 Photos with snapshot-style frames show places of interest the trail users can visit today. They should relate to the body text. Photo sizes, position, and angle can vary.

7 Photo captions can expand upon the main story. They should be short.

Town Story panels are reproduced digitally in four colors (CMYK) typically using an embedded fiberglass technique.

When selecting or taking photographs for your panel, be sure they have sufficient resolution. Images should have at least 300 dpi at their full size on the panel.

INFORMATION KIOSKS

Town Map & Directory Panel Graphic Specifications

One of three standard kiosk panel types, the Town Map & Directory panel orients trail users to restaurants, shops, services, and amenities available in the trail town.

There are two versions of this map. This one which has the shops located with a key list, and one like on the next page which just has a street map, and relies on a brochure with the keyed street map for the user to locate businesses.

This map probably needs to be replaced yearly as businesses change; the other version on the next page requires brochure printing and an effort to keep the map holder stocked.



Detail: Typical Town Map Panel

Scale 1-1/2"=1' 0"

1 Title header identifies the town along with a town tag line. The swoosh should be used on all panels to convey a cachet of being part of a connected system of trails. An Adobe Illustrator file for the swoosh is available on the EPTA website.

2 The Erie to Pittsburgh Trail Logo may be placed to the left or right of the town name to convey a cachet of being part of a connected system of trails.

3 Town map, with key numbers for shops, restaurants, services, and amenities.

4 Directory of shops, restaurants, services, and amenities, keyed to map by number.

5 Sponsor identification (not shown) can be placed along the bottom of the panel.

6 Photos with snapshot-style frames show a general skyline or main street image, or places of interest not specific to any business or service. Photo sizes, position, and angle can vary.

7 Photo captions should be short.

8 Regional information and regional map can be included to give the trail user an overall view of the area.

9 Include a scale, so the trail user can get some sense of distances involved.

When selecting or taking photographs for your panel, be sure they have sufficient resolution. Images should have at least 300 dpi at their full size on the panel.

Town Map & Directory panels are reproduced digitally in four colors (CMYK) on a vinyl adhesive applique. The applique is adhered to a metal substrate which is mounted to the kiosk post legs. Because of their ever changing nature, trail town maps and directories should be changed out as needed, therefore this production method is suitably economical.

INFORMATION KIOSKS

Town Map & Directory Panel Graphic Specifications

One of three standard kiosk panel types, the Town Map & Directory panel orients trail users to restaurants, shops, services, and amenities available in the trail town.

There are two versions of this map. This one which relies on a brochure with the keyed street map for the user to locate businesses and one like on the previous page that has the shops located with a key list.

This map would not be replaced yearly as businesses change; the brochure would be updated, and there would be a continual maintenance effort to keep map holder stocked.

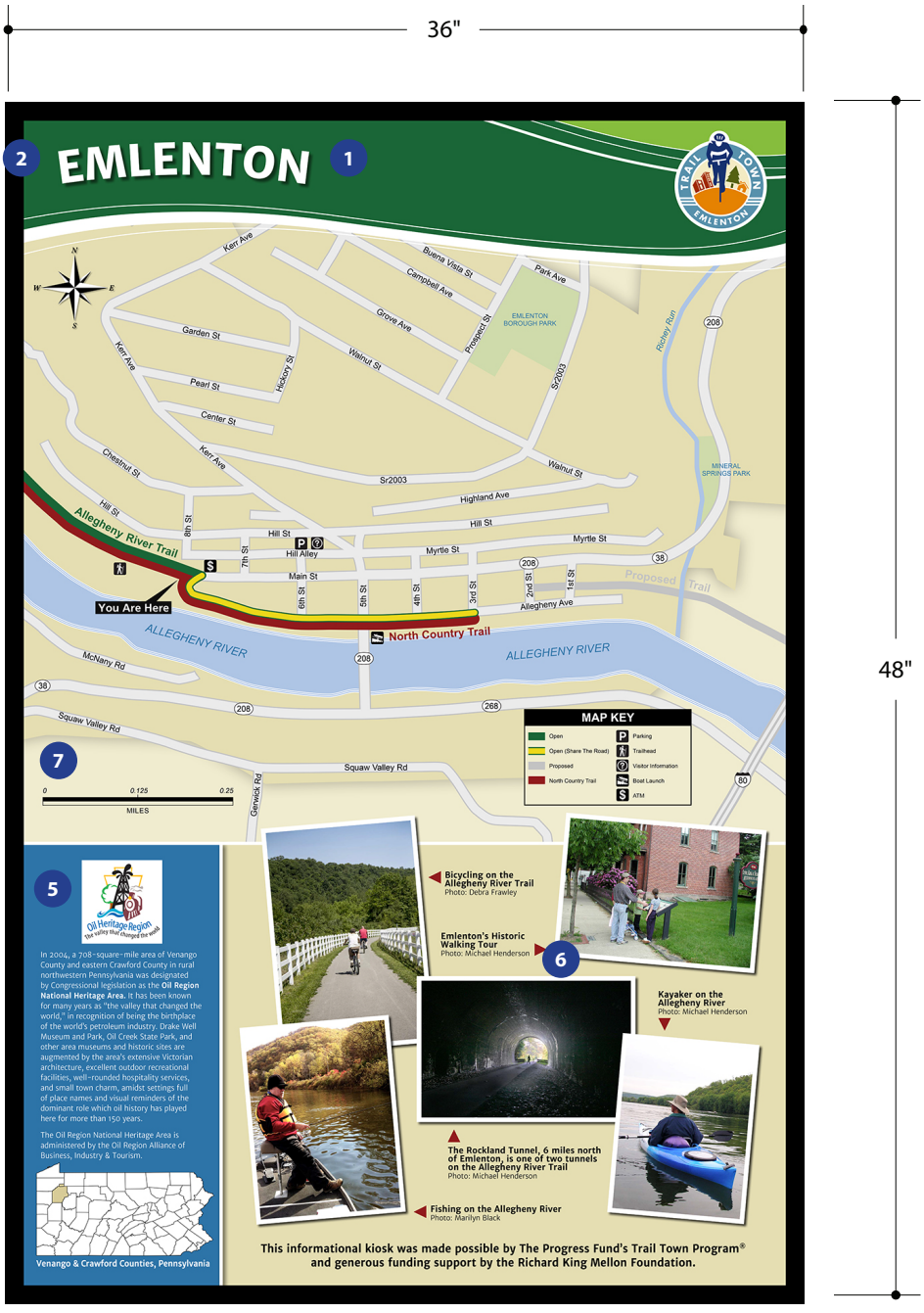

Detail: Typical Town Map Panel

Scale 1-1/2"=1' 0"

1 Title header identifies the town along with a town tag line. The swoosh should be used on all panels to convey a cachet of being part of a connected system of trails. An Adobe Illustrator file for the swoosh is available on the EPTA website.

2 The Erie to Pittsburgh Logo may be placed to the left or right of the town name to convey a cachet of being part of a connected system of trails.

3 Town map, with key numbers for shops, restaurants, services, and amenities are not shown on this panel, but are contained on a brochure.

4 Sponsor identification (not shown) can be placed along the bottom of the panel.

5 Regional information and regional map can be included to give the trail user an oerall view of the area.

6 Photos with snapshot-style frames show a general skyline or main street image, or places of interest not specific to any business or service. Photo sizes, position, and angle can vary. Photo captions should be short.

7 Include a scale, so the trail user can get some sense of distances involved.

When selecting or taking photographs for your panel, be sure they have sufficient resolution. Images should have at least 300 dpi at their full size on the panel.

Town Map & Directory panels are reproduced digitally in four colors (CMYK) on a vinyl adhesive applique or may be embedded fiberglass.

INFORMATION KIOSKS

EPT Trail Map Panel Graphic Specifications



Detail: Typical Trail Map Panel

Scale 1-1/2"=1' 0"

One of three standard kiosk panel types, the Trail Map panel gives trail users valuable orientation information and highlights points of interest and changes in elevation.

1 Title header identifies this as the overall trail. The swoosh should be used on all panels to convey a cachet of being part of a connected system of trails. An Adobe Illustrator file for the swoosh is available on the EPTA website.

2 The Erie to Pittsburgh Trail Logo is placed to the right of the trail name to convey a cachet of being part of a connected system of trails.

3 Photos with snapshot-style frames and special caption area show places of interest along the trail. Photo sizes, position, and angle can vary..

4 Standard descriptor for Erie to Pittsburgh Trail appears the same on all Trail Map panels. An Adobe Illustrator file for the text is available on the EPTA website.

5 The star on the trail region key map varies by location. The distance to the end messages change as well.

6 Relationship of the town to the Erie to Pittsburgh Trail, and town history

7 Elevation chart remains constant, except for location of red dot indicating current position.

8 Include a scale, so the trail user can get some sense of distances involved.

Town Map panel is reproduced digitally in four colors (CMYK) on a vinyl adhesive applique. The applique is adhered to a metal substrate which is mounted to the kiosk post legs. Because of their ever changing nature, trail maps should be changed out as needed, therefore this production method is suitably economical.

When selecting or taking photographs for your panel, be sure they have sufficient resolution. Images should have at least 300 dpi at their full size on the panel.

INFORMATION KIOSKS

Local Trail Map Panel Graphic Specifications

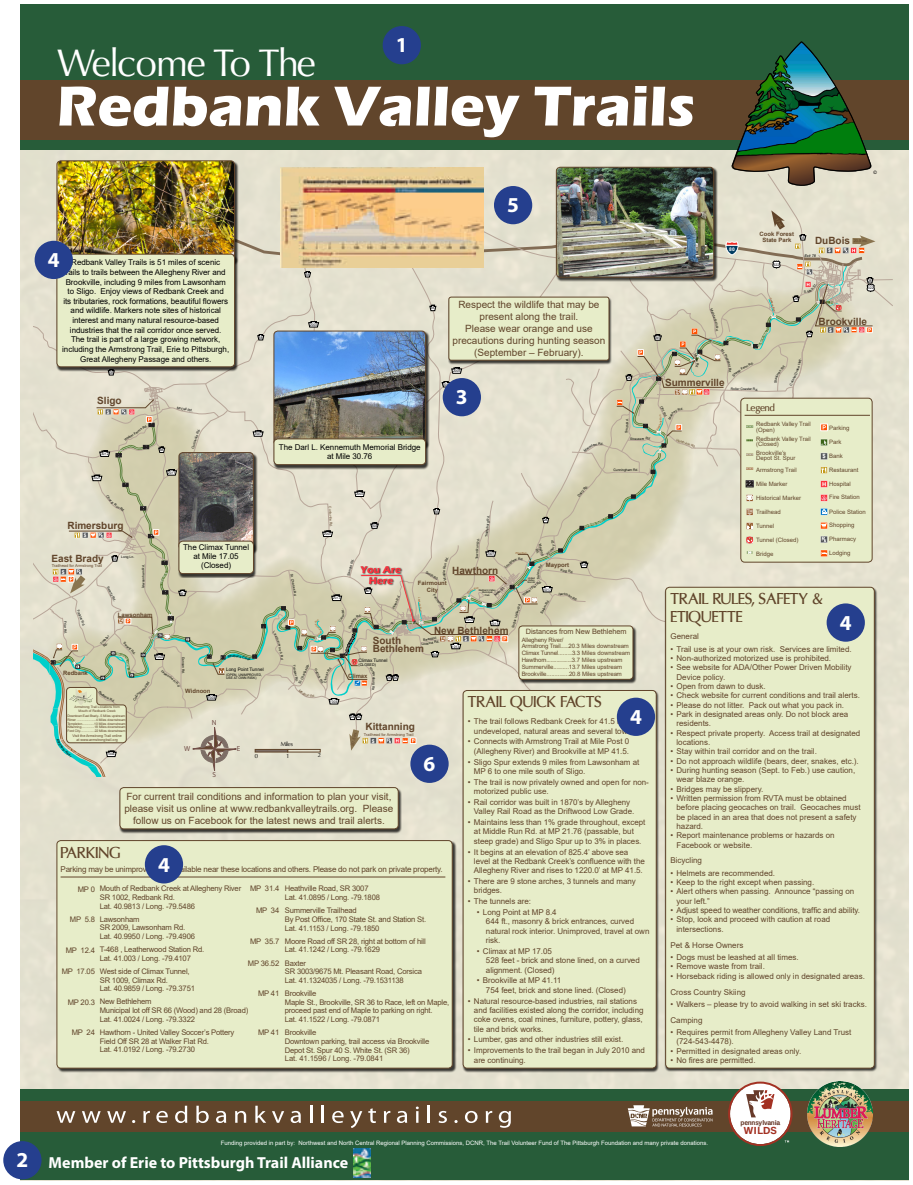

Detail: Typical Trail Map Panel

Scale 1-1/2"=1' 0"

An optional fourth panel, the Local Trail Map panel gives trail users valuable orientation information and highlights points of interest and changes in elevation about the local trail.

1 Title header identifies this as the local trail. The swoosh (not shown) should be used on all panels to convey a cachet of being part of a connected system of trails. An Adobe Illustrator file for the swoosh is available on the EPTA website.

2 The Erie to Pittsburgh Trail Logo and member of Erie to Pittsburgh Trail Alliance is placed somewhere on the panel to convey a cachet of being part of a connected system of trails.

3 Photos with snapshot-style frames and special caption area show places of interest along the trail. Photo sizes, positions and angles can vary.

4 Trail description, facts, parking, rules and history can be displayed in various boxes.

5 Elevation chart remains constant at all trailheads, except for location of red dot indicating current position.

6 Include a scale, so the trail user can get some sense of distances involved.

Trail Map panel is reproduced digitally in four colors (CMYK) on a vinyl adhesive applique. The applique is adhered to a metal substrate which is mounted to the kiosk post legs. Because of their ever changing nature, trail maps should be changed out as needed, therefore this production method is suitably economical.

When selecting or taking photographs for your panel, be sure they have sufficient resolution. Images should have at least 300 dpi at their full size on the panel.

ROOFED MESSAGE BOARDS







Information Kiosks also include roofed versions. They may be one,two,three or four panels long. Depending on the angle of placement to the trail, they may have information only on one side. One of the panels may also be reserved for temporary pin up notices.

Roofs can be many different shapes. The three depicted on the left are typical. A Google query for *roofed kiosks* will yield many different forms.

Brochure holders integrated with the graphic panels can hold town and trail maps.

Kiosks which include trail town maps and directories should be situated so that the town map is oriented according to the physical world.

Based on how often the information on the panel will change, there are two suggested construction methods. Trail town maps and directories may change out on an annual or semi-annual basis so a high-resolution digital printing technology on a vinyl film which is applied to a metal substrate is suitably economical. Town story and trail maps are not changed very often so fiberglass embedded panels may be appropriate.

The area below and immediately around information kiosks should be carefully landscaped to minimize maintenance burden. Consider hard materials such as concrete, brick, cobblestones, or specialty materials that will prohibit weed growth.

This area below should also be ADA accessible, which is required by some funding sources.

DIRECTIONAL: TRAIL DESTINATIONS

Overview



This sign is located on the trail opposite of and facing the access path from parking areas. The front of the sign shows the next two trailheads, each way, listed in order from Erie to Pittsburgh, with Erie at the top and Pittsburgh at the bottom.

If neither of the next two trailheads have services, then the next town with services may be added to the list.

Since total mileage is not yet known the towns of Erie and Pittsburgh do not have a mileage.

The user's current location is not listed, and is marked with a rule which divides destinations to the right and left.

The back of the sign, typically facing woods or the river and not highly visible, can be dressed with a pattern or left blank. For component consistency and to cover up the internal construction, all signs have back panels.

DIRECTIONAL: TRAIL DESTINATIONS
Construction

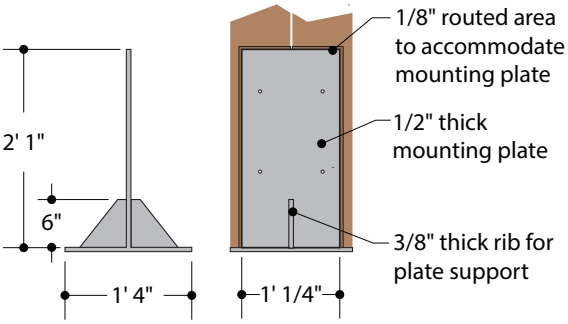

Footer Mounting Plate
Not to Scale

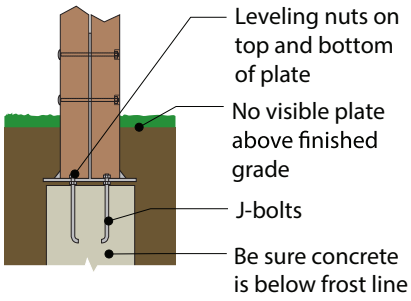

Footer Assembly
Not to Scale

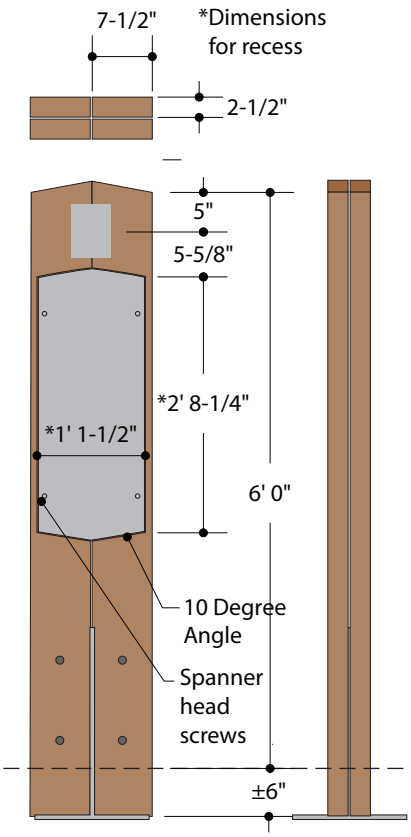

Front/Side/Top Views, Assembly
Scale 1/2"=1' 0"

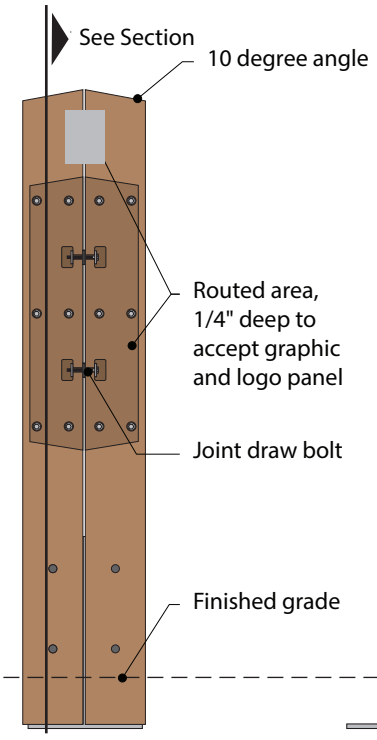

Front View, w/o Panels
Scale 1/2"=1' 0"

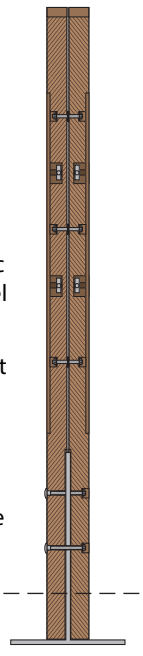

Section
Scale 1/2"=1' 0"

GENERAL NOTES

1 The body of this sign is made from 3"x8"x7' plastic lumber. Color/material: EPT Cedar.

2 The mounting plate is welded from steel plate. For corrosion protection, the plate must be galvanized.

3 The footer is recycled concrete poured in a round form such as Sonotube, with J-bolts inserted. Be sure the footer passes below the frost line of the installation location.

4 The footer and mounting plate must be set low enough that the mounting plate rib is just under the finished grade and not exposed.

5 By placing nuts on the J-bolts under and above the mounting plate, the plate can be adjusted level and plumb. Nuts with nylon inserts are recommended.

6 Joint draw bolts, nuts, and bolts behind the graphic panels must be countersunk or recessed in the lumber so they do not obstruct the graphic panels.

7 Washers should be placed on all attachments between the boards to maintain consistent 1/4" spacing between all boards.

8 The inside faces of boards are routed to accommodate the mounting plate while maintaining 1/4" spacing between the boards.

9 The sign is secured to the mounting plate with carriage bolts. The nuts for these carriage bolts should be countersunk and the holes covered with a cap matching the carriage bolt heads.

10 The 1/4" recesses to receive the logo and graphic panels must be free of scalloping. There must be a smooth, consistent 1/8" gap all around the installed graphic panels.

DIRECTIONAL: TRAIL DESTINATIONS

Graphic Specifications

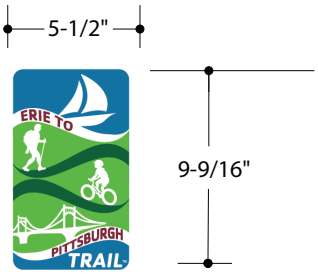

Detail: Logo Panel

Scale 1-1/2"=1' 0"

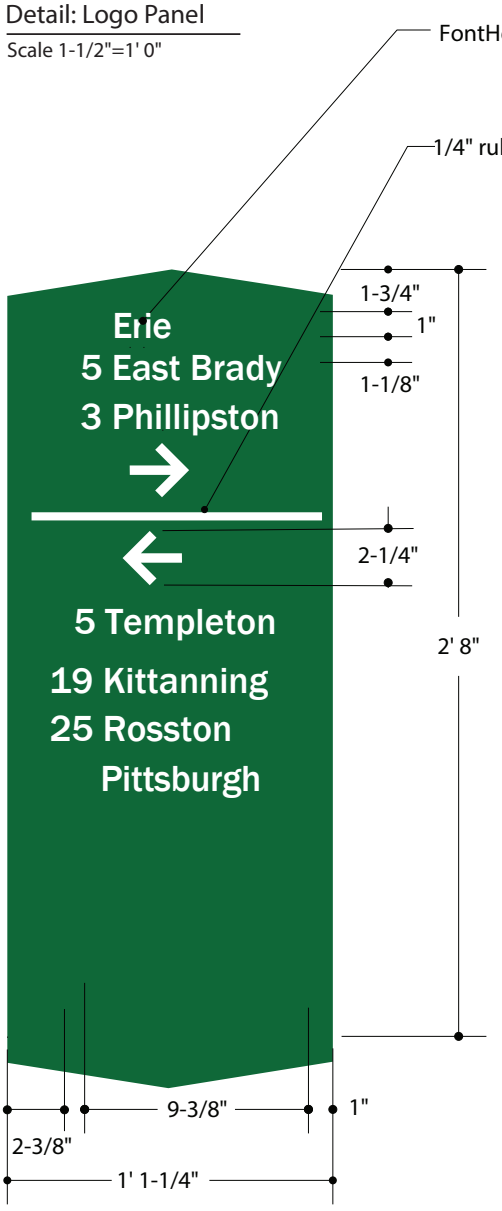

Detail: Graphic Panel 1

Scale 1-1/2"=1' 0"



Detail: Graphic Panel 2

Scale 1-1/2"=1' 0"

GENERAL NOTES

1 Graphic and logo panels are 1/8" painted or powder coated aluminum sheet with screen-printed graphics and are attached to plastic sign body with spanner head screws that are painted to match the graphic panel. See construction drawing for location of screws.

2 Two logo panels, one graphics panel and one back panel are required for the complete sign. The back of the sign, typically facing woods and not highly visible, can be dressed with a pattern or left blank. For component consistency and to cover up the internal construction, all signs have back panels.

3 Color for the graphics panel is EPT dark green as shown in section 3. Edges of the graphic panels are colored the same as the face.

4 Colors for the logo panel are shown in section 2. The edges of the logo panels are varied in color and are colored to match the outermost color of the logo.

DIRECTIONAL: TRAIL JUNCTIONS

Overview



GENERAL NOTES

This sign is similar to the Directional: Trail Destinations (page 6.1), except that it is square and has mileage panels on four sides, rather than two.

This sign is located on the trail at the intersection of two trails. It is typically placed in one of the corners where the trails join.

As an alternative to this sign, horizontal signs may be used. See Horizontal Directional Sign Section 6.7

For each trail, the sign shows the next two trailheads, each way. The Erie to Pittsburgh sign, lists them in order from Erie to Pittsburgh, with Erie at the top and Pittsburgh at the bottom. The crossing trail lists them in the order from west to east with the westernmost trailhead at the top, and the eastern-most trailhead at the bottom.

If neither of the next two trailheads have services, then the next town with services may be added to the list.

Since total mileage is not yet known the towns of Erie and Pittsburgh do not have a mileage.

The user's current location is not listed, and is marked with a rule which divides destinations to the right and left.

The Erie to Pittsburgh Trail side shows two 8" boards, whereas the crossing trail shows 4 boards; 3", 4", 4" and a 3" board. See top view on next page.

Logos at the top of the sign should match the trail.

DIRECTIONAL: TRAIL JUNCTIONS

Construction

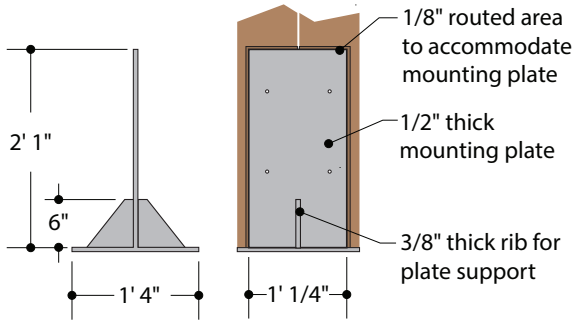

Footer Mounting Plate

Not to Scale

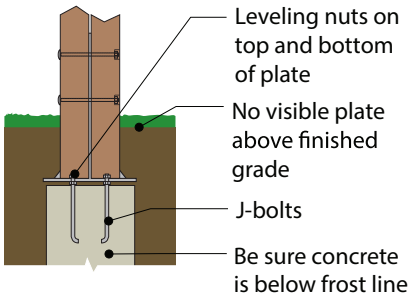

Footer Assembly

Not to Scale

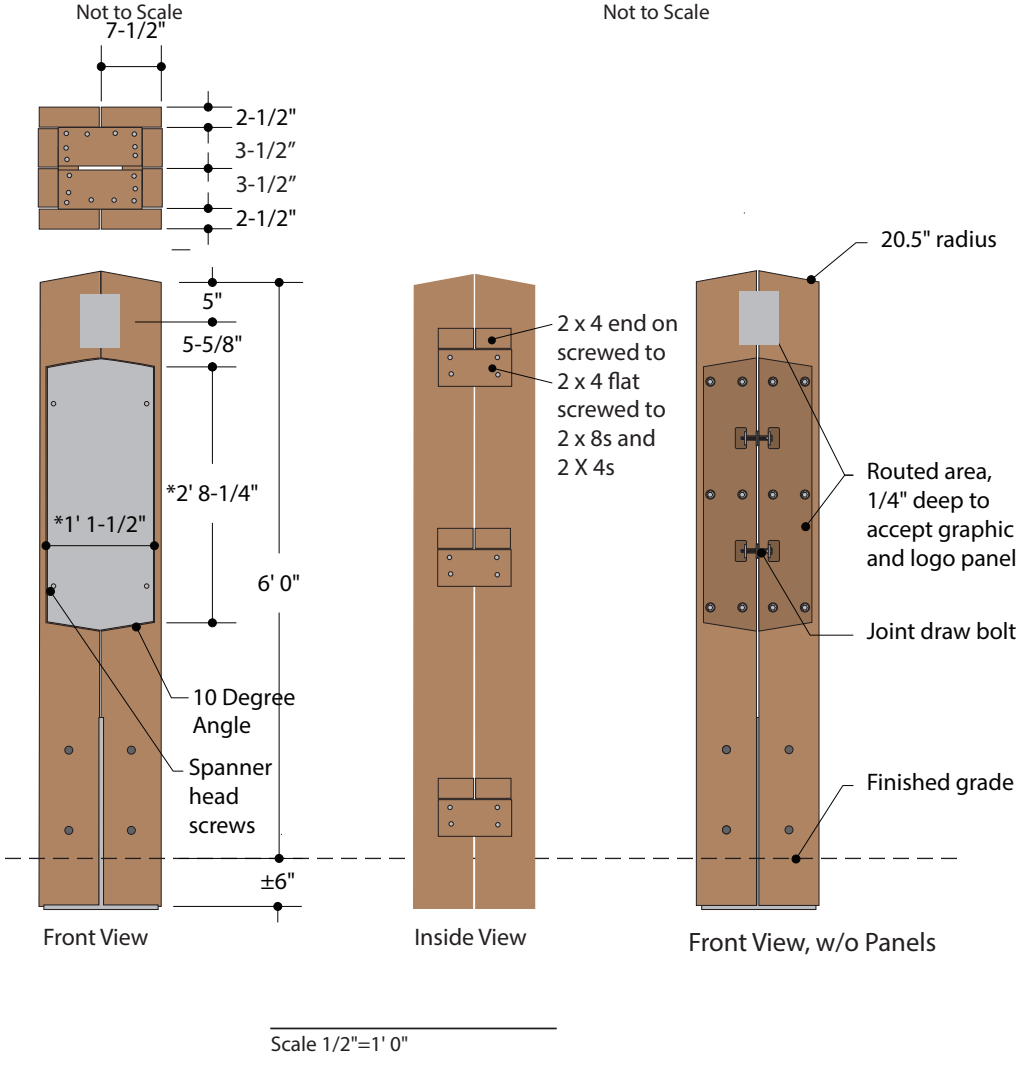

Scale 1/2"=1' 0"

GENERAL NOTES

1 The body of this sign is made from 3"x8"x8' and 3"x4"x8' plastic lumber. Color/material: EPT Cedar.

2 The mounting plate is welded from steel plate. For corrosion protection, the plate must be galvanized.

3 The footer is recycled concrete poured in a round form such as Sonotube, with J-bolts inserted. Be sure the footer passes below the frost line of the installation location.

4 The footer and mounting plate must be set low enough that the mounting plate rib is just under the finished grade and not exposed.

5 By placing nuts on the J-bolts under and above the mounting plate, the plate can be adjusted level and plumb. Nuts with nylon inserts are recommended.

6 Joint draw bolts, nuts, and bolts behind the graphic panels must be countersunk or recessed in the lumber so they do not obstruct the graphic panels.

7 Washers should be placed on all attachments between the boards to maintain consistent 1/4" spacing between all boards.

8 The inside faces of boards are routed to accommodate the mounting plate while maintaining 1/4" spacing between the boards.

9 The sign is secured to the mounting plate with carriage bolts. The nuts for these carriage bolts should be countersunk and the holes covered with a cap matching the carriage bolt heads.

10 The 1/4" recesses to receive the logo and graphic panels must be free of scalloping. There must be a smooth, consistent 1/8" gap all around the installed graphic panels.

DIRECTIONAL: TRAIL JUNCTION
Graphic Specifications

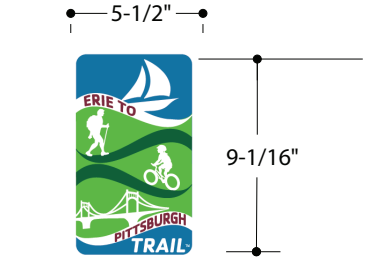

Detail: Logo Panel
Scale 1-1/2"=1' 0"

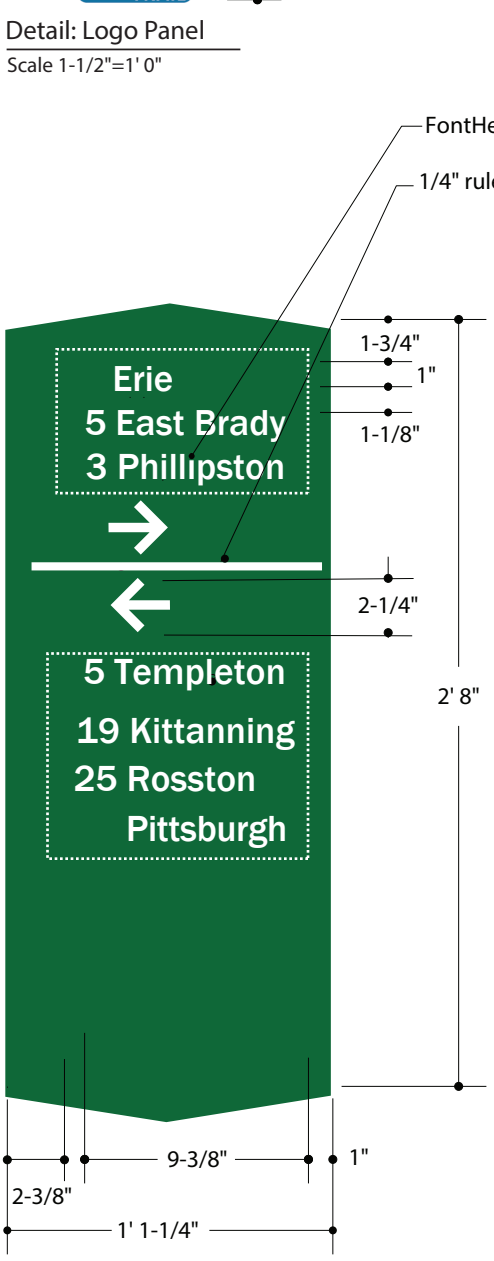

Detail: Graphic Panel 1
Scale 1-1/2"=1' 0"

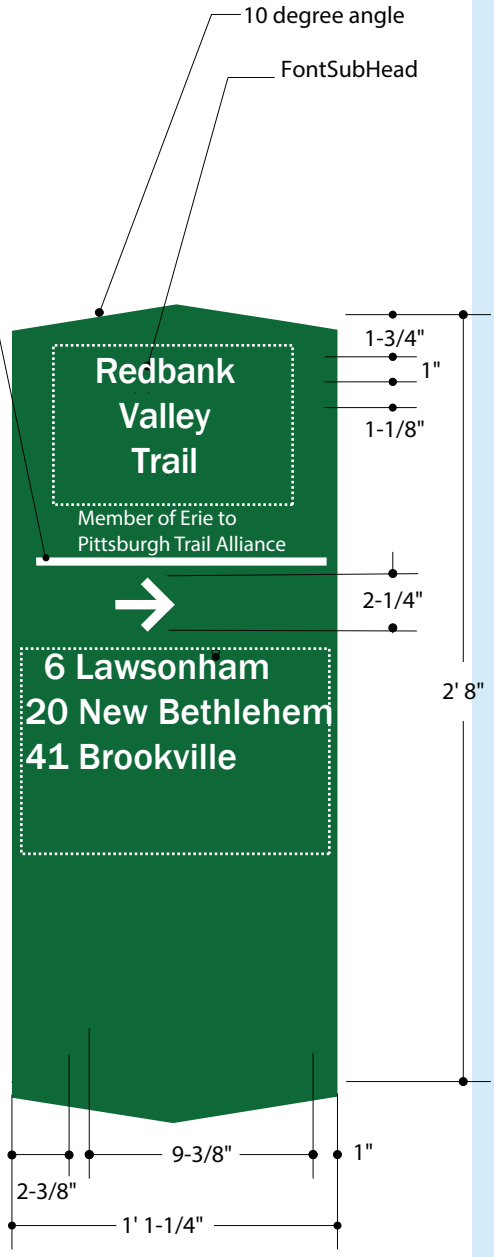

Detail: Graphic Panel 2
Scale 1-1/2"=1' 0"

GENERAL NOTES

This sign is similar to the Directional: Trail Destinations (page 6.1), except that it has mileage panels on four sides, rather than two.

1 Graphic and logo panels are 1/8" painted or powder coated or anodized aluminum sheet with screen-printed graphics and are attached to the plastic sign body with spanner head screws that are painted to match the graphic panel. See construction drawing for location of screws.

2 If the trails cross then two of each graphic panel are required for the complete sign. If one of the trails tees into the other then two of one panel is required and one of the other. Graphics on twin panels are identical, except for the position of arrows. Left or right arrows must be reversed on opposing twin panel.

3 Colors for the graphic panels are EPT Dark Green with EPT White lettering. Edges of the graphic panel are same as the face color. See pages 3.5, Colors, Finishes, and Materials, for complete specifications.

4 Colors for the logo panel are shown on page 2.1, Logo Overview. The edges of the logo panel are painted to match the outermost color of the logo.

5 Messages outlined in dashed boxes may change. The dashed box indicates maximum extent of copy. Other messages should not change.

6 Logos at the top of the sign should match the trail.

Horizontal Directional Sign

Overview



Horizontal signs that give directional guidance and distances along the trail generally are placed at locations where only a few item are necessary to be specified, but may include up to four items.

This sign may be located on the trail at the intersection of two trails. It is typically placed in one of the corners where the trails join. It may also be placed at an intermediate trailhead.

They are single-sided. Trail logo may or may not appear. Text of "Member of Erie to Pittsburgh Trail Alliance" may or may not appear.

The sign may be placed on their own posts, or mounted on a wall or convenient surface. Depending on the mounting condition, these signs are mounted with thru-bolts and nuts, with bolts set in epoxy, or with lag bolts.

For each trail, the sign shows the next two trailheads, each way. The Erie to Pittsburgh sign, lists them in order from Erie to Pittsburgh, with Erie at the top and Pittsburgh at the bottom. The crossing trail lists them in the order from west to east with the westernmost trailhead at the top, and the easternmost trailhead at the bottom.

If neither of the next two trailheads have services, then the next town with services may be added to the list.

Since total mileage is not yet known, the towns of Erie and Pittsburgh do not have a mileage.

The user's current location is not listed.

Horizontal Directional Sign

Construction

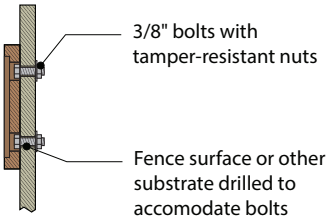

Section, Mounting Detail 1

Scale 1-1/2"=1' 0"

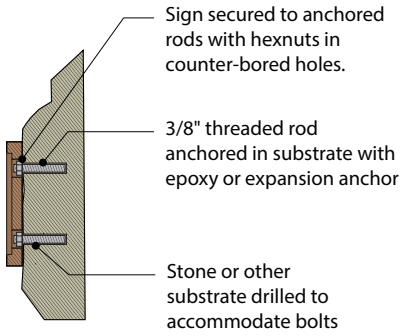

Section, Mounting Detail 2

Scale 1-1/2"=1' 0"

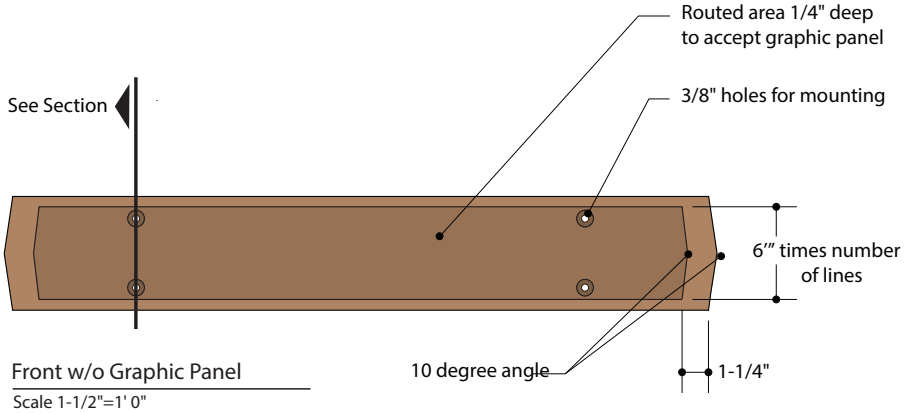

Front w/o Graphic Panel

Scale 1-1/2"=1' 0"

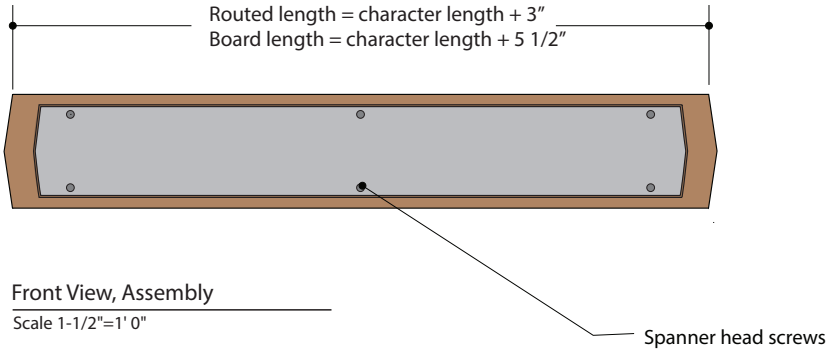

Front View, Assembly

Scale 1-1/2"=1' 0"

GENERAL NOTES

1 The body of these signs are made from 3/4"x6‴ plastic lumber. Color/material: EPT Cedar.

2 When routing or milling the 1/4" recesses to receive the graphic panel, avoid scalloping the recess edges. There should be a smooth, consistent 1/16" gap all around the installed graphic panel.

3 Where signs are attached to fence rails or other substrates with backside access, they are attached with thru-bolts and tamper-resistant hexnuts. The bolt head should be countersunk below the surface of the recess to accommodate the graphic panel.

4 For mounting to rocks or masonry structures without access to backside, use lag bolts or threaded inserts anchored with epoxy.

Horizontal Directional Sign

Graphic Specifications

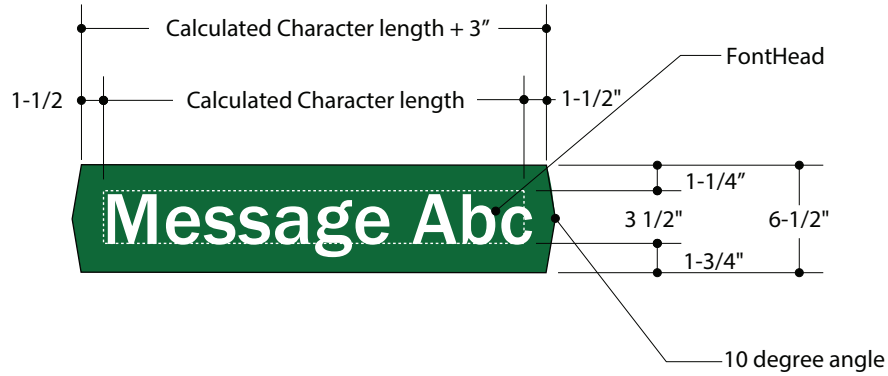

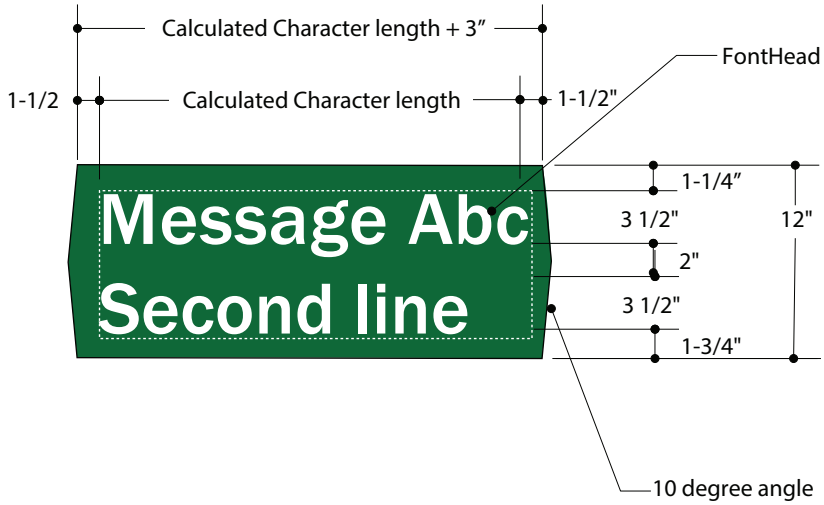

GENERAL NOTES

1 Graphic panels are 1/8" painted, anodized or powder coated aluminum sheet with screen-printed graphics and are attached to plastic sign body with spanner head screws that are painted to match the graphic panel. See construction drawing for location of screws.

2 One graphics panel is required for the complete sign.

3 Color for the graphics panel is EPT dark green as shown in section 3. Edges of the graphic panels are colored the same as the face.

4 The dashed box indicates maximum extent of lettering, which will vary by location.

DIRECTIONAL: TOWN AMENITIES

Overview



Town Directional Amenity signs are located at road crossings to broadly orient trail users to the towns they are approaching. Two signs are needed at each crossing. One for northbound and one for southbound travelers. Optionally one sign can be used if it is visible from both directions. The front of the sign displays directional messages in two or three groupings: Destinations ahead, destinations to the left, and destinations to the right.

The written messages must be very broad, providing only general geographic cues (Downtown, Southside, Main Street, State Route 25) or resources and destinations of special value to the user (Visitor Center, turntable). Only one text line is allotted for this message in the standard format. Any exception will require limiting information elsewhere in the layout. Specific restaurants or stores should not be signed. This more detailed information is available at Information Kiosks—See page 5.4.

Up to three international symbols on one line can be included with each directional grouping to orient trail users to general direction of services and amenities in town (food, telephone, restrooms, etc). See page 3.6 for more international symbols available for the purpose.

The topmost groupings, for destinations ahead, may include features of the trailhead (Visitor Center, Coal Tower) and always includes the next trailhead and if no services there, the next trailhead with services. Each entry should have a mileage, except the terminus city is without mileage.

Two slender graphic panels on the sides of the sign include the name of the town and the name of the intersecting roadway.

The back of the sign, typically facing the roadway, can be dressed with a pattern or left blank. For component consistency and to cover up the internal construction, all signs have back panels.

DIRECTIONAL: TOWN AMENITIES

Construction

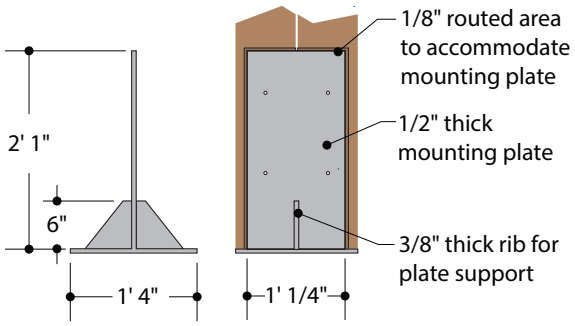

Footer Mounting Plate
Not to Scale

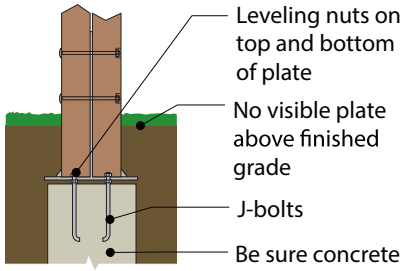

Footer Assembly
Not to Scale

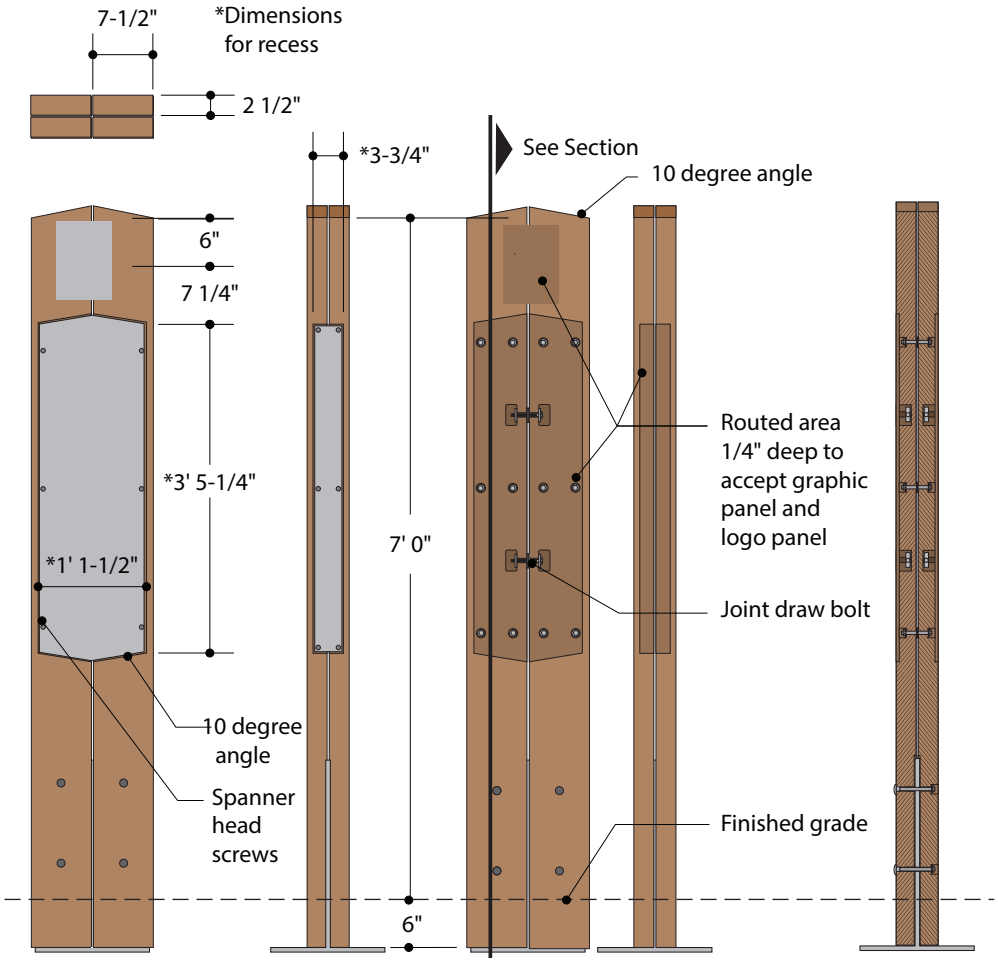

Front/Side View, Assembly
Scale 1/2"=1' 0"

Front/Side View, w/o Panels
Scale 1/2"=1' 0"

Section
Scale 1/2"=1' 0"

GENERAL NOTES

1 The body of this sign is made from 3"x8"x8' plastic lumber. Color/material: EPT Cedar.

2 The mounting plate is welded from steel plate. For corrosion protection, the plate must be galvanized.

3 The footer is recycled concrete poured in a round form such as Sonotube, with J-bolts inserted. Be sure the footer passes below the frost line of the installation location.

4 The footer and mounting plate must be set low enough that the mounting plate rib is just under the finished grade and not exposed.

5 By placing nuts on the J-bolts under and above the mounting plate, the plate can be adjusted level and plumb. Nuts with nylon inserts are recommended.

6 Joint draw bolts, nuts, and bolts behind the graphic panels must be countersunk or recessed in the lumber so they do not obstruct the graphic panels.

7 Washers should be placed on all attachments between the boards to maintain consistent 1/4" spacing between all boards.

8 The inside faces of boards are routed to accommodate the mounting plate while maintaining 1/4" spacing between the boards.

9 The sign is secured to the mounting plate with carriage bolts. The nuts for these carriage bolts should be countersunk and the holes covered with a cap matching the carriage bolt heads.

10 The 1/4" recesses to receive the logo and graphic panels must be free of scalloping. There must be a smooth, consistent 1/8" gap all around the installed graphic panels.

DIRECTIONAL: TOWN AMENITIES

Graphic Specifications

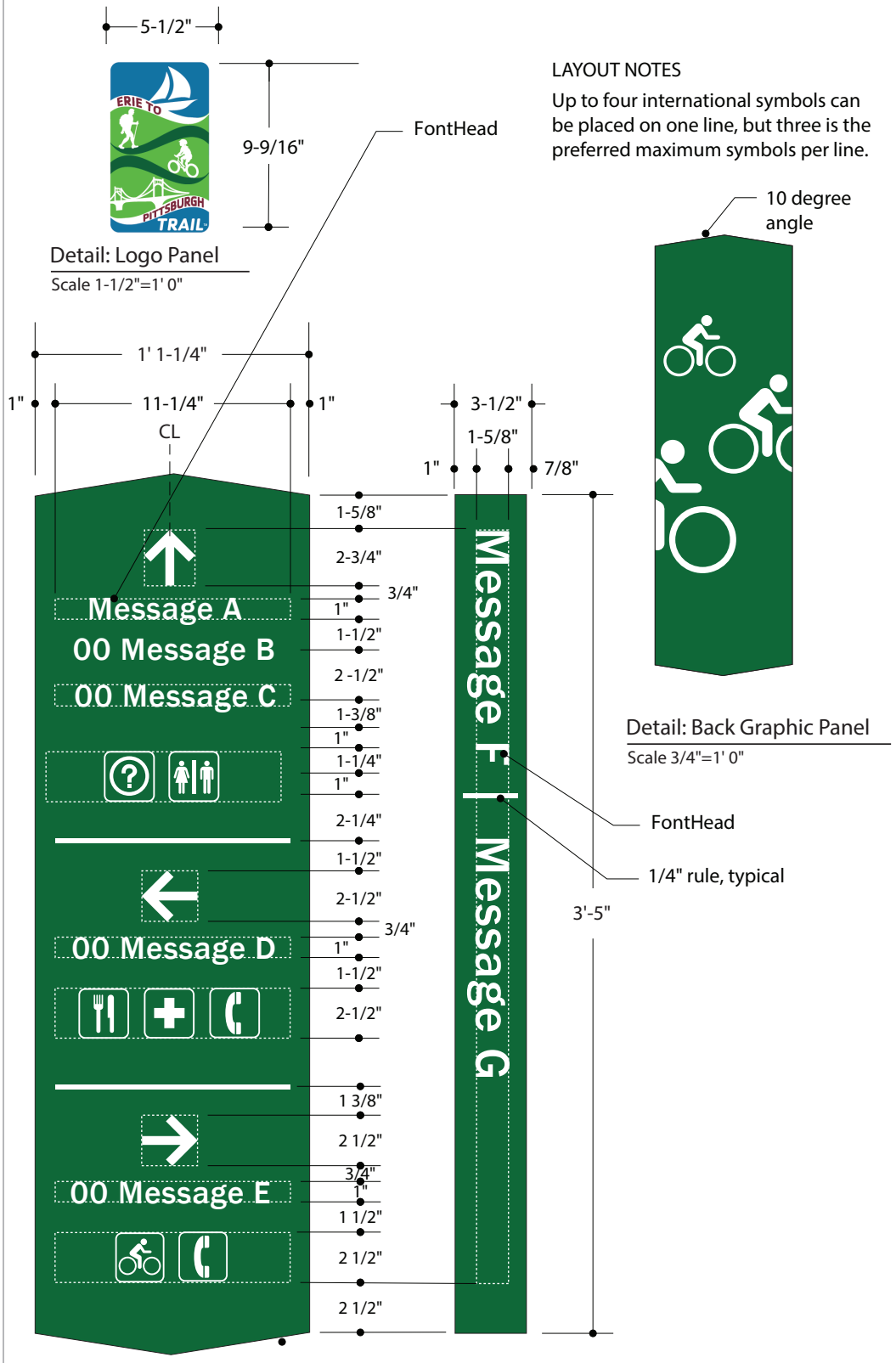

LAYOUT NOTES

Up to four international symbols can be placed on one line, but three is the preferred maximum symbols per line.

Detail: Back Graphic Panel

Scale 3/4"=1' 0"

FontHead

1/4" rule, typical

GENERAL NOTES

1 Graphic and logo panels are 1/8" painted or powder coated or anodized aluminum sheet with screen-printed graphics and are attached to plastic sign body with spanner head screws that are painted to match the graphic panel.

2 Two logo panels, one graphics panel and one back panel are required for the complete sign. The back of the sign, typically facing woods and not highly visible, can be dressed with a pattern or left blank.For component consistency and to cover up the internal construction, all signs have back panels.

3 Color for the graphics panel is EPT Dark Green as shown in section 3.5. Edges of the graphic panels are colored the same as the face.

4 Colors for the logo panel are shown in section 2.1. The edges of the logo panels are varied in color and are colored to match the outermost color of the logo.

5 Messages outlined in dashed boxes will vary from location to location. The dashed box indicates maximum extent of copy.

SPECIAL FEATURE IDENTIFIER

Overview



STANDARD
BOARD LENGTHS

A = 1' 10"
B = 2' 2"
C = 2' 6"
D = 2'10"

Special feature identifiers are smaller horizontal signs that identify scenic and historical sites of interest along the trail. They are single-sided and come in four standard lengths to accommodate a variety of place names, but custom lengths can be created as well for longer messages—just use multiples of four inches.

Usually, the sign type acts as an identifier of something that is immediately visible. Less frequently, it may include an arrow to lead to a destination removed from the trail.

Depending on the mounting condition, these signs are mounted with thru-bolts and nuts, with bolts set in epoxy, or with lag bolts.

Standard Sign Examples

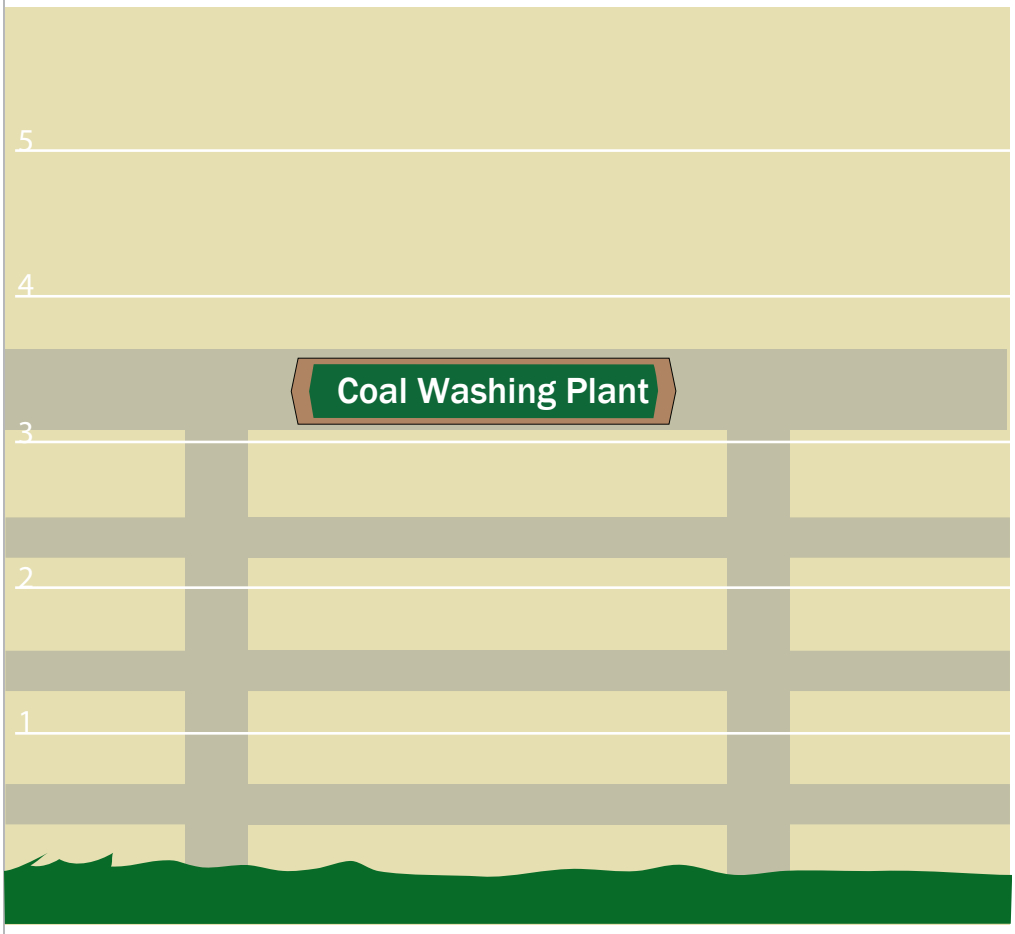

SPECIAL FEATURE IDENTIFIER

Construction

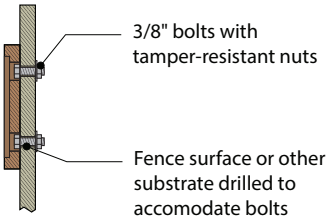

Section, Mounting Detail 1

Scale 1-1/2"=1' 0"

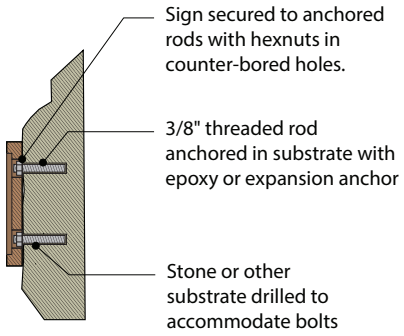

Section, Mounting Detail 2

Scale 1-1/2"=1' 0"

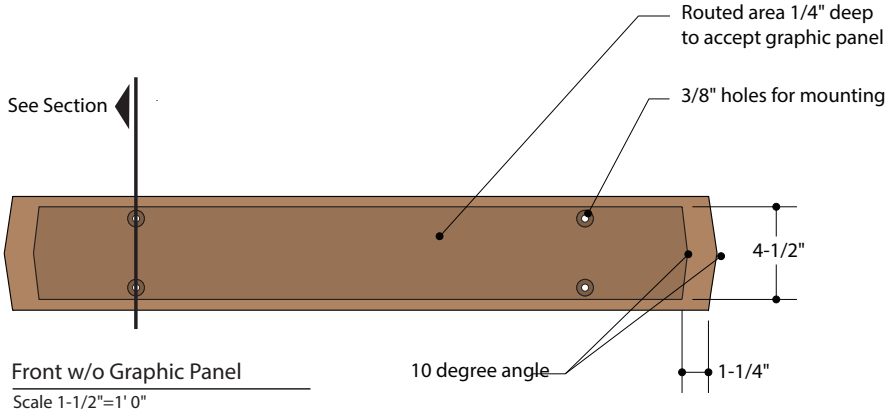

Front w/o Graphic Panel

Scale 1-1/2"=1' 0"

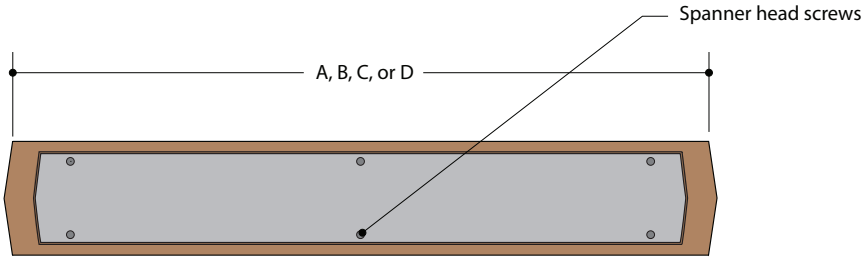

Front View, Assembly

Scale 1-1/2"=1' 0"

STANDARD
BOARD LENGTHS

A = 1' 10"
B = 2' 2"
C = 2' 6"
D = 2'10"

GENERAL NOTES

1 The body of these signs are made from 5/4"x6" plastic lumber. Color/material: EPT Cedar.

2 When routing or milling the 1/4" recesses to receive the graphic panel, avoid scalloping the recess edges. There should be a smooth, consistent 1/16" gap all around the installed graphic panel.

3 Where signs are attached to fence rails or other substrates with backside access, they are attached with thru-bolts and tamper-resistant hexnuts. The bolt head should be countersunk below the surface of the recess to accommodate the graphic panel.

4 For mounting to rocks or masonry structures without access to backside, use lag bolts or threaded inserts anchored with epoxy.

SPECIAL FEATURE IDENTIFIER

Graphic Specifications

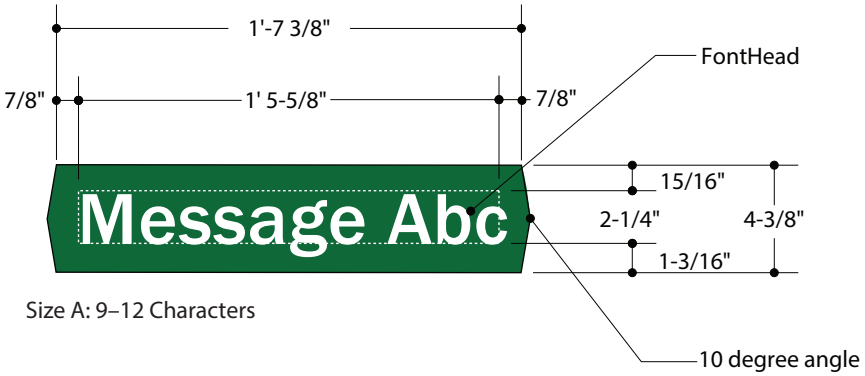

Size A: 9–12 Characters

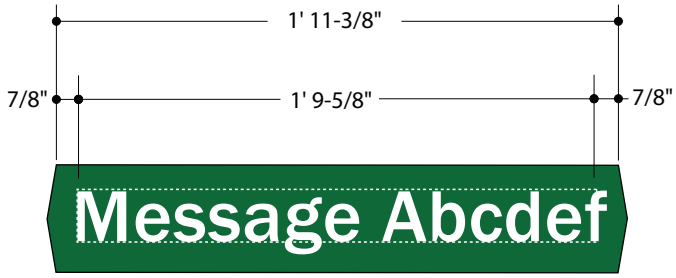

Size B: 12–15 Characters

STANDARD
BOARD LENGTHS

A = 1' 10"
B = 2' 2"
C = 2' 6"
D = 2'10"

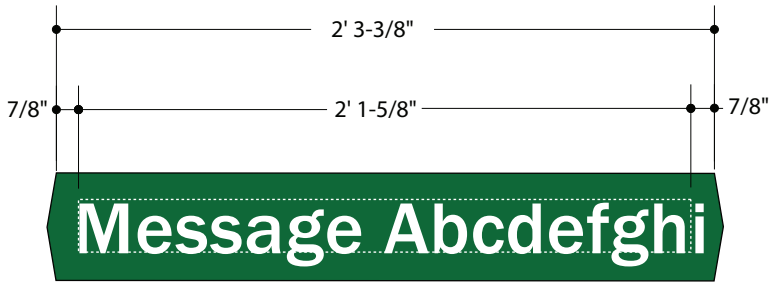

Size C: 15–18 Characters

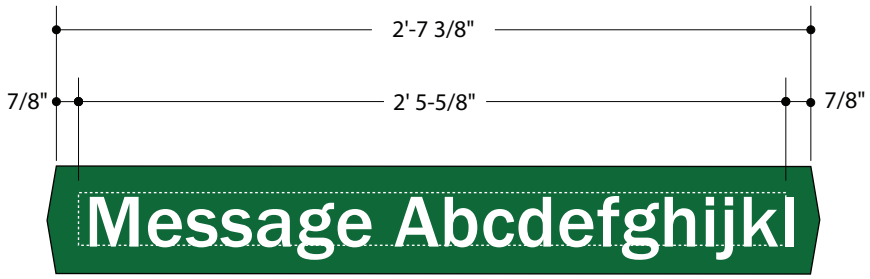

Size D: 18–21 Characters

Standard Graphic Panels

Scale 1-1/2"=1'-0"

GENERAL NOTES

1 Graphic panels are 1/8" painted, anodized or powder coated aluminum sheet with screen-printed graphics and are attached to plastic sign body with spanner head screws that are painted to match the graphic panel. See construction drawing for location of screws.

2 One graphics panel is required for the complete sign.

3 Color for the graphics panel is EPT dark green as shown in section 3. Edges of the graphic panels are colored the same as the face.

4 The dashed box indicates maximum extent of lettering, which will vary by location.

SPECIAL FEATURES POST SIGN

Overview

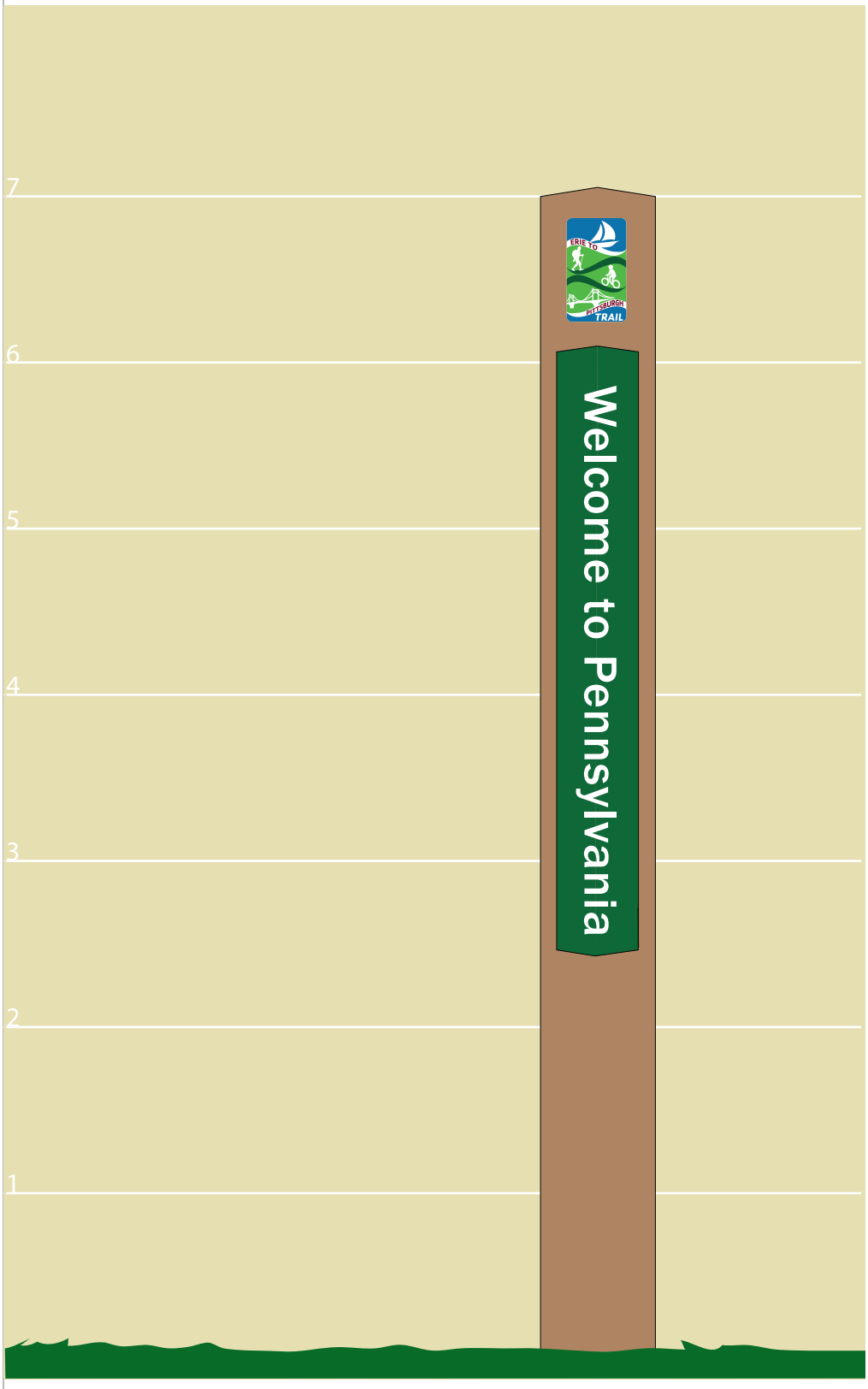

Some sites or features along the Erie to Pittsburgh Trail warrant special and distinctive signing. This post design is for identifying border information like the Pennsylvania, New York border.

It is installed flanking the trail with the Pennsylvania messages visible to south-bound trail travelers, and New York messages visible to north-bound travelers.

This post design might be applied to other trail features as well. Note that this sign is composed of only one solid piece of lumber, to distinguish it from the standard signs which are composed of four boards.

SPECIAL FEATURES POST SIGN

Construction

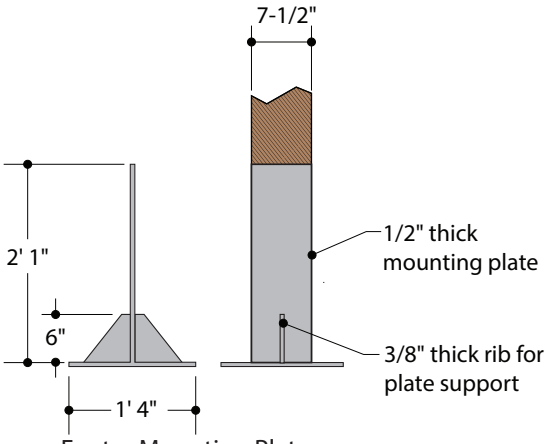

Footer Mounting Plate

Not to Scale

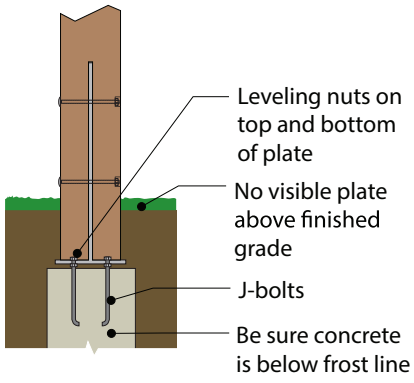

Footer Assembly

Not to Scale

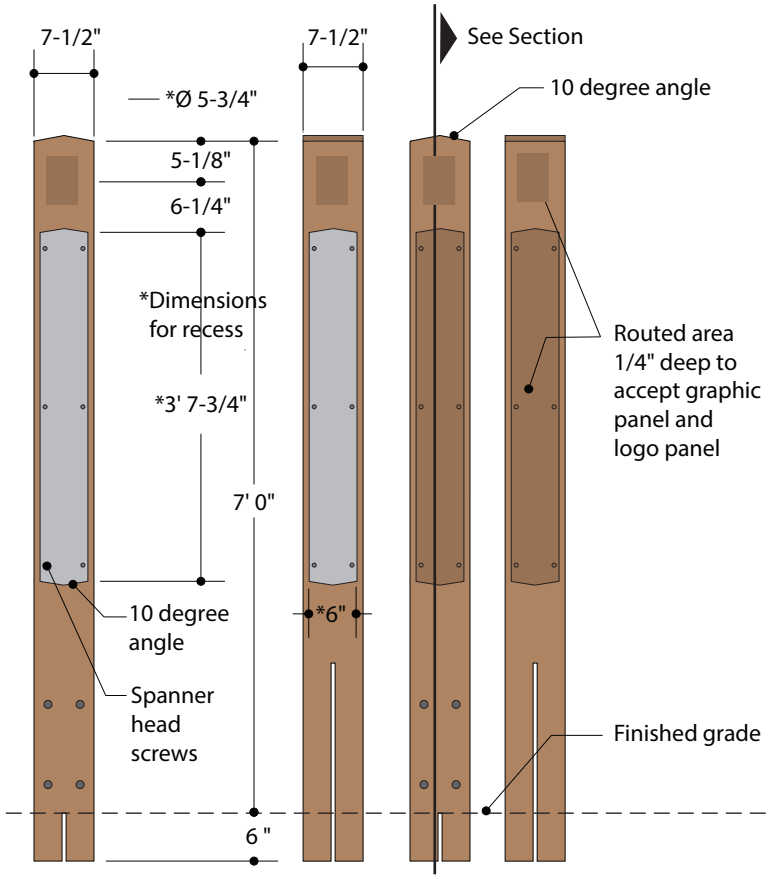

Front/Side Views, Assembly

Scale 1/2"=1' 0"

Front/Side Views, w/o Panels

Scale 1/2"=1' 0"

Section

Scale 1/2"=1' 0"

GENERAL NOTES

1 The body of this sign is made from 8"x8"x8' plastic lumber. Color/material: EPT Cedar.

2 The mounting plate is welded from steel plate. For corrosion protection, the plate must be galvanized.

3 The footer is recycled concrete poured in a round form such as Sonotube, with J-bolts inserted. Be sure the footer passes below the frost line of the installation location.

4 The footer and mounting plate must be set low enough that the mounting plate rib is just under the finished grade and not exposed.

5 By placing nuts on the J-bolts under and above the mounting plate, the plate can be adjusted level and plumb. Nuts with nylon inserts are recommended.

6 The sign post is slotted at the bottom in two directions to accept the mounting plate.

7 The sign post is secured to the mounting plate with carriage bolts. The nuts for these carriage bolts should be countersunk and the holes covered with a cap matching the carriage bolt heads.

8 The 1/4" recesses to receive the logo and graphic panels must be free of scalloping. There must be a smooth, consistent 1/8" gap all around the installed graphic panels.

SPECIAL FEATURES POST SIGN

Graphic Specifications

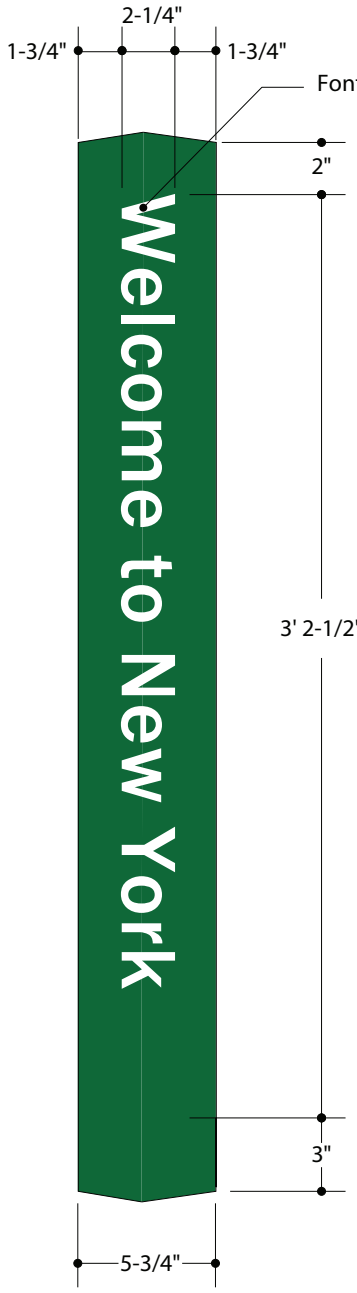

Detail: Graphic Panel 1

Scale 1 1/2"=1'-0"

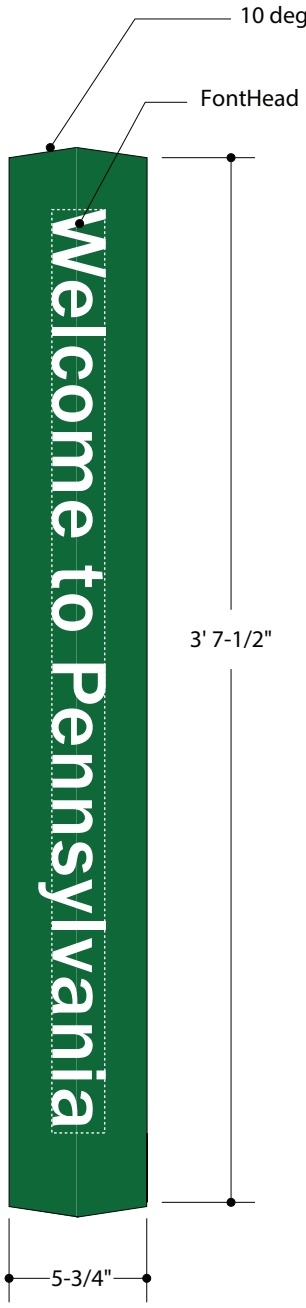

Detail: Graphic Panel 2

Scale 1 1/2"=1'-0"

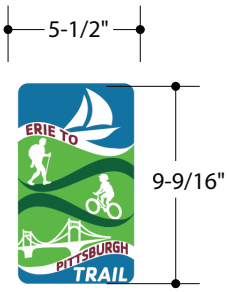

Detail: Logo Panel

Scale 1-1/2"=1' 0"

GENERAL NOTES

1 Graphic and logo panels are 1/8" painted or powder coated or anodized aluminum sheet with screen-printed graphics and are attached to the plastic sign body with spanner head screws that are painted to match the graphic panel. See construction drawing for location of screws.

2 Two graphic panels are required for the complete sign. Messages do not vary from that shown.

3 Colors for the graphic panels are EPT Dark Green with EPT White lettering. Edges of the graphic panel are same as the face color. See pages 3.5, Colors, Finishes, and Materials, for complete specifications.

4 Colors for the logo panel are shown on page 2.1, Logo Overview. The edges of the logo panel are painted to match the outermost color of the logo.

MILE MARKER
Overview



Some members of the Erie to Pittsburgh Trail Alliance are currently (2016) using railroad miles and mile markers.

For missing official railroad markers, the trail group is using tapered concrete squares about 30" tall.

Once the entire trail is complete, an additional set of mile markers will be added that cover the entire trail with zero at the start point in Erie and somewhere around 270 miles or so at the Point in Point State Park in Pittsburgh.





MILE MARKER

Graphic Specification

The mile markers have a 10" by 10" base, and are tapered to a 6" by 6" top. The top surface is flat, with a slight slope to allow water to run off. The mile marker is constructed 32 inches tall and is set with about 30 inches exposed.

Two rebar protrude out the bottom for about 18". Weight of the finished marker is about 120 lbs.

Installation instructions:
Monuments should be placed approximately 6' off of the trail. Use a post hole digger to dig a hole deep enough (roughly 8" wide x 20" deep) for the rebar to set into and for the monument to be level with the surface adjacent to the trail. Fill hole with dry or slightly wet concrete.

Three approaches to facilitate mowing are:

1) Expand the top of the post hole to an area approximately 18" round or square and about 4" deep. Fill this area with remesh about 2 inches off the ground. Remesh is a standard concrete product consisting of .01 inch (12 gauge) rebar on approximate 6 inch centers. Set monument in the center with rebars pushing through the concrete. Fill in the surrounding hole with more concrete, level with the ground surface.

2) Excavate an area approximately 4" deep and 3' square. Build a form with 2 X 4s and set into excavated area. Fill this area with remesh about 2 inches off the ground. Remesh is a standard concrete product consisting of .01 inch (12 gauge) rebar on approximate 6 inch centers. Set monument in the center with rebars pushing through the concrete. Level the monument then mix concrete with water and pour into mold. Smooth the surface and allow to dry.

3) Fill in the area between the marker and the trail with trail surface material. Place a piece of fiber cloth around the monument extending at least 8 inches around the monument and abutting the trail surface. Cover with 4" of crushed limestone. It is preferable to use AASHTO#10 stone for this.

Armstrong Rails to Trails Association and Allegheny Valley Trails Association obtained their markers from Franklin Concrete Products, 970 Mercer Road, Franklin, PA 16323, 814-437-3013 for $80 each (2016).

To eliminate painting maintenance the concrete used to make the mile marker may be tinted white.

The surrounding base is not tinted nor painted, but is the standard concrete gray. Another approach to the base is to place the mile marker about six feet off the trail, and have the trail surface extend from the trail and around the mile marker.

The letters are stenciled on the two opposite faces of the mile marker so they can be seen as the mile marker is approached.

The face facing the trail has the EPT logo attached. The logo is 5" x 8-3/4" and is on a 3/32 or 1/8 aluminum sheet with the logo printed on it or attached vinyl.

TRAIL BLAZER

Overview

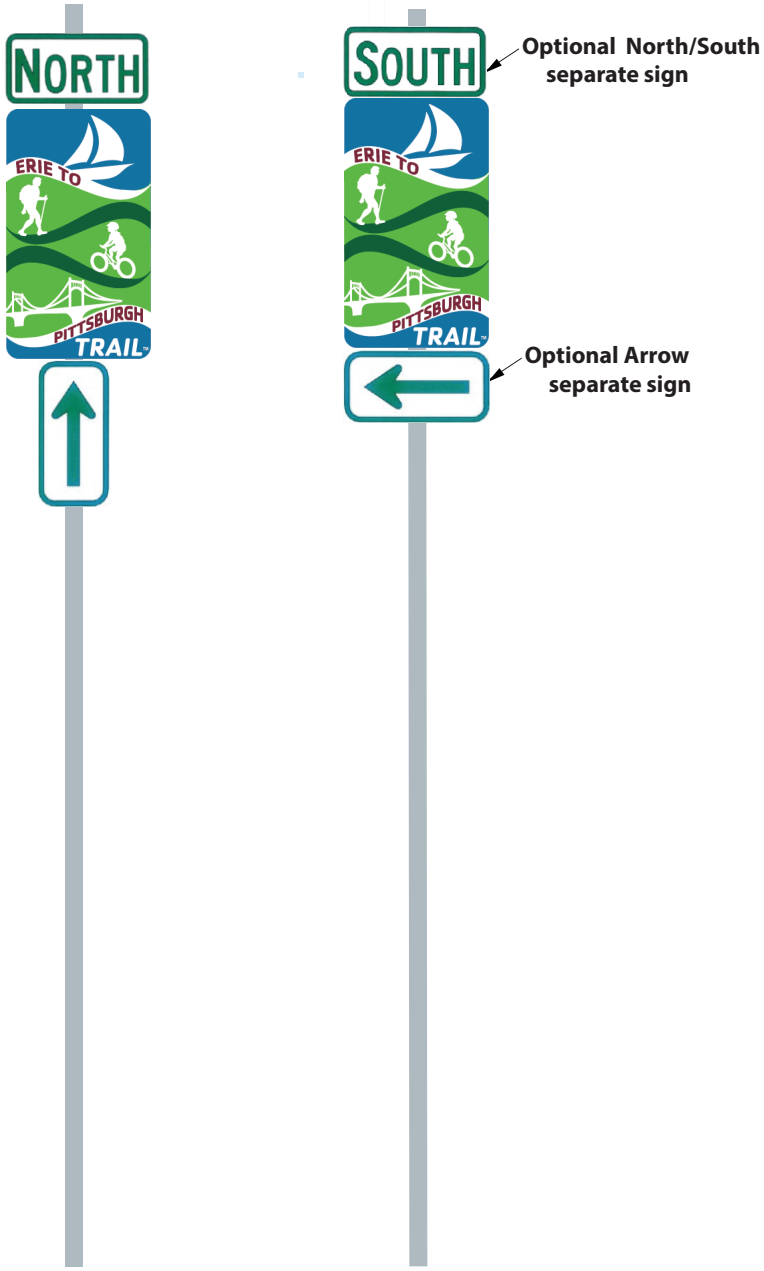

Trail Blazer signs are typically located in urban areas where the trail may change course repeatedly or share the path of a road or pedestrian walkway. In rural areas, the Trail Blazer is used to reinforce the trail user's confidence that they are still on their desired trail.

The sign should be located at decision points and intervals in between if distances are significant.

Optionally another sign just past the decision point and within sight of the decision point can be placed. This will assure the traveler they have made the right choice.

Owners of the roadway/pathway are typically concerned about sign pollution. Work with the owner of the roadway/pathway for an agreement to place signs and the sign locations. To facilitate this approval it is sometimes helpful to take a picture of the existing post that is intended for use, or area where a new post is proposed and to Photoshop an image of the new sign on the photo.

On state owned roads a different logo panel must be used, and prior approval for each location must be obtained. See page 2.3 for alternate logo sign.

TRAIL BLAZER

Construction

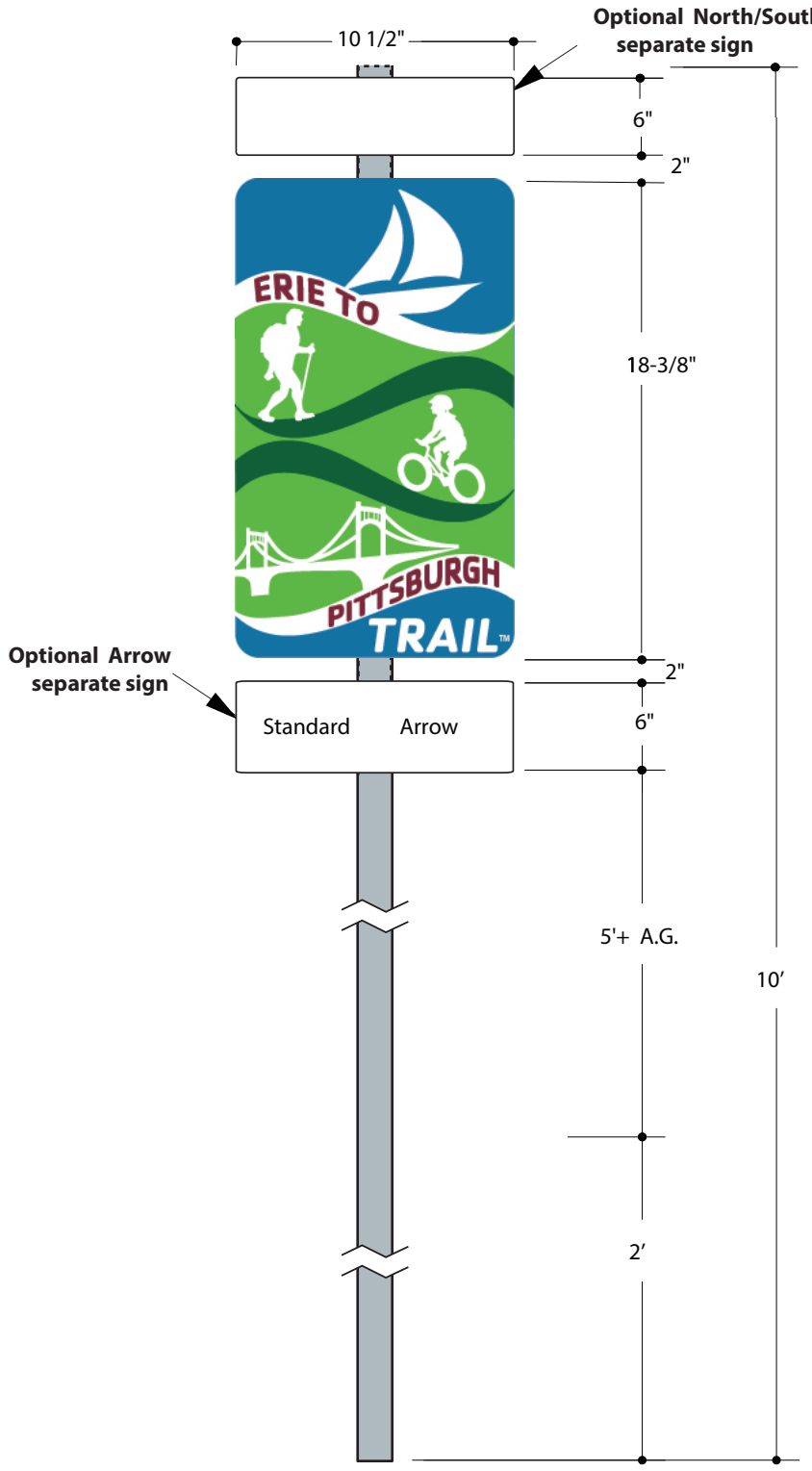

Front View

Scale 3' = 1' 0"

GENERAL NOTES

1 Sign panel is 3/32" or 1/8" aluminum. Posts are standard perforated square tubes or U channels used for highway signs.

2 Depending on sign placement, two panels, back to back may be used with north on one side and south on the other.

3 Arrow is standard arrow and may be mounted vertically.

4 Attach sign panel to posts with spanner head bolts. Use tamper resistant nuts with nylon inserts on back side.

5 Auger holes for posts to depth exceeding frost line. Backfill holes with stone to level. Set posts and backfill with dry concrete. For ease of mowing level concrete and trim to a smooth shape. Ambient moisture and rain will harden footer.

6 See page 2.1 and 2.3 for the logo sign description and colors.

HERITAGE INTERPRETIVE SIGNS

Overview

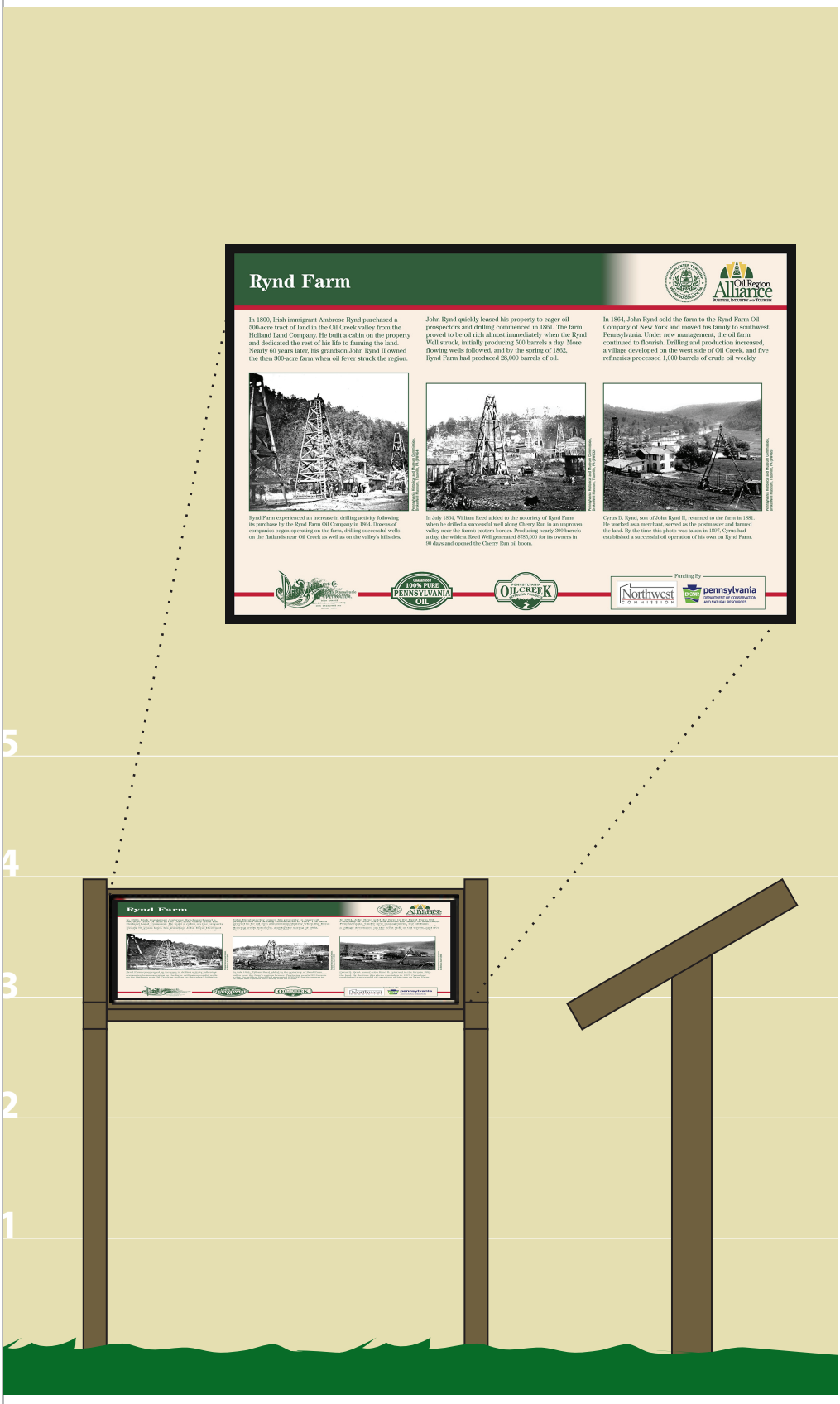

Heritage interpretive signs highlight and explain invaluable scenic and historic sites along the trail, greatly enriching the trail user experience.

The interpretive panels are typically produced as a digital graphic which is embedded in fiberglass, making them highly vandal and weather resistant.

The sign structure is a welded steel frame painted with exterior grade polyurethane enamel.

The exhibit legs should be bolted to concrete footers, or set directly in augured holes exceeding the frost line. Backfill with stone to level, set posts, and then backfill with dry concrete. Ambient moisture and rainwater will harden footer.

If you are thinking about implementing heritage/interpretive panels, you should read the *Wayside Exhibits User Guide* published by the National Park Service, Harpers Ferry Center. http://www.nps.gov/hfc/pdf/waysides/Wayside-Guide-First-Edition.pdf

See the EPTA private website for a list of vendors that have been used by the trails of EPTA. http://signmanual.eriepittsburghtrail.org/vendors/

Sample Interpretive Panel Layouts

The layout of the sign is dependent on how much content and what photos are available and the aspect ratio of the photos. The first choice is two column or three column format, then how pictures are arranged amongst the text. Below are some samples that have been used. More samples can be seen at http://signmanual.eriepittsburghtrail.org/heritage

If contemplating doing a design, a very helpful guide is the *Wayside Exhibits User Guide* published by the National Park Service, Harpers Ferry Center.
https://www.nps.gov/hfc/pdf/waysides/Wayside-Guide-First-Edition.pdf

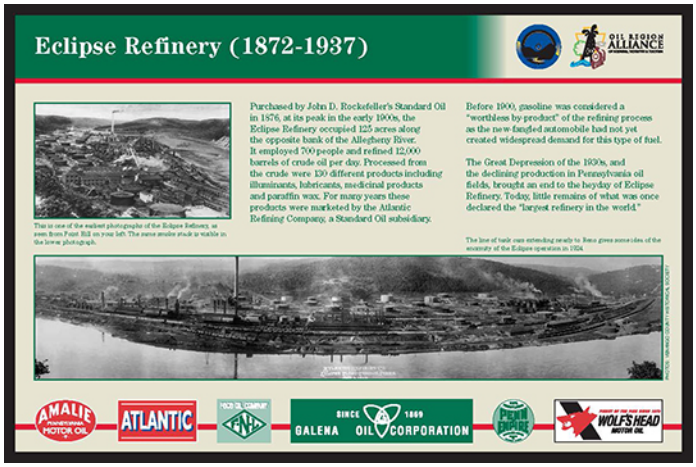



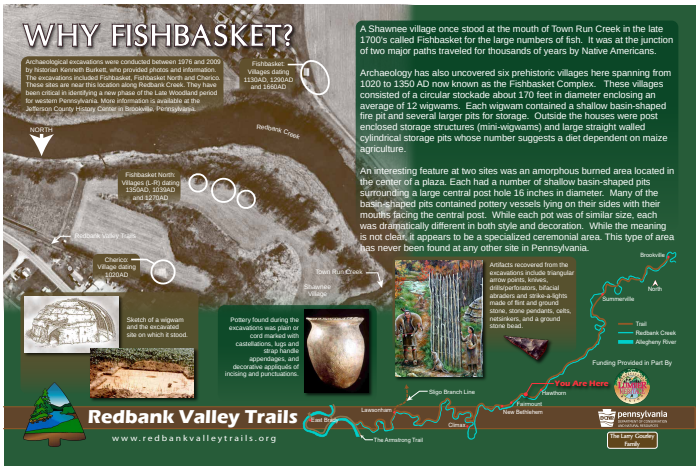

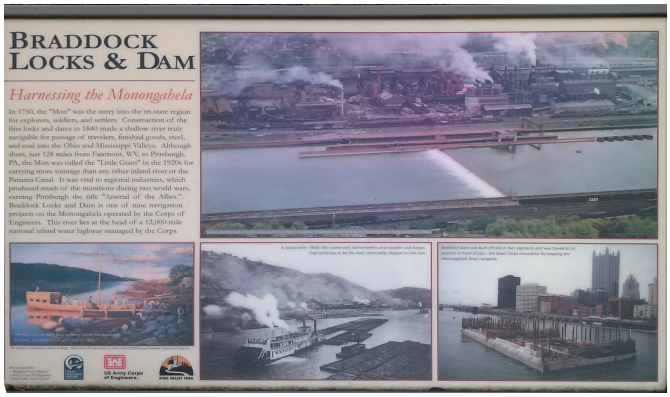

HERITAGE INTERPRETIVE SIGNS

Graphic Specifications

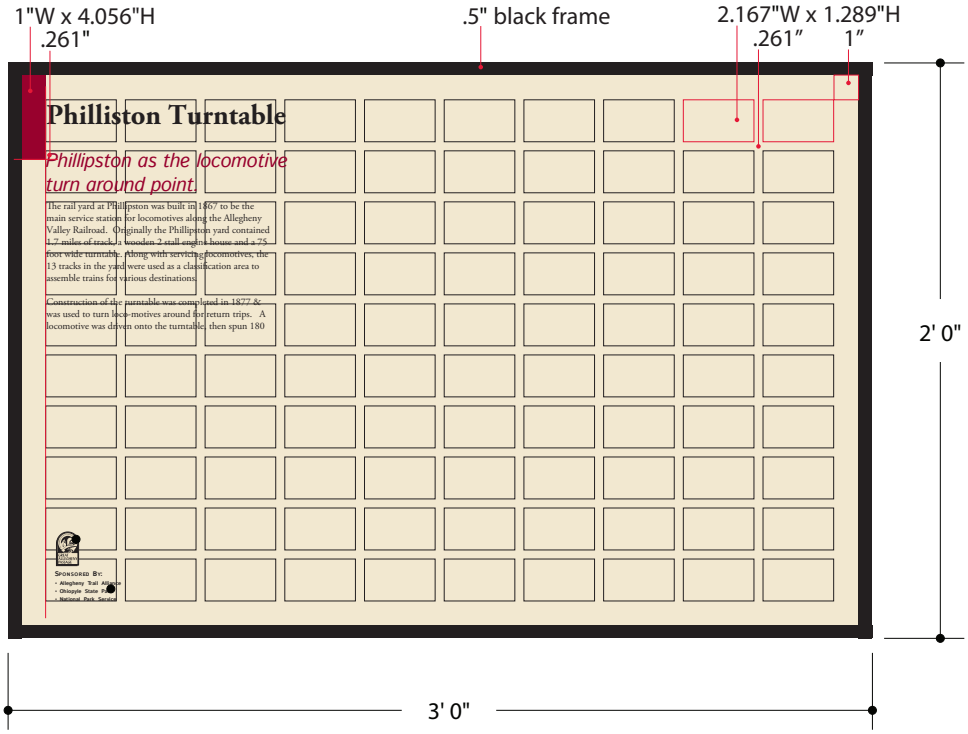

Grid Specifications

Scale 1-1/2' = 1' 0"

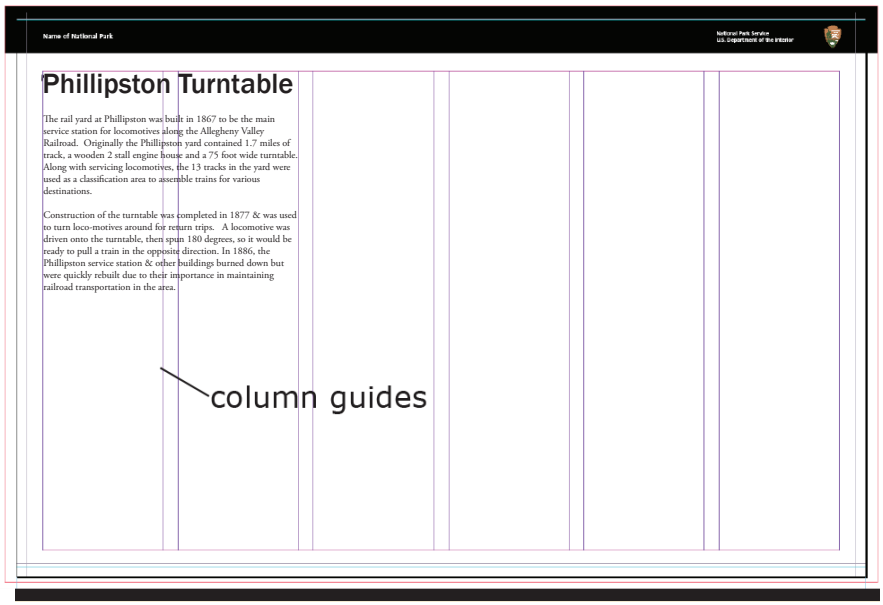

June 2008 Grid

GENERAL NOTES

1 Graphic panels are produced as high-resolution digital prints on paper substrate which is then embedded in fiberglass.

2 These two layout suggestions can be used when creating artwork for heritage/interpretive panels. The top layout grid at the left is from the 1991 edition of *Wayside Exhibits User Guide* published by the National Park Service, Harpers Ferry Center. The bottom layout is from the 2008 edition. https://www.nps.gov/hfc/pdf/way-sides/Wayside-Guide-First-Edition.pdf

3 Detailed typographic specifications follow on page 6.23.

4 Artwork should be prepared in Adobe Illustrator, Adobe InDesign, or similar illustration or page layout programs.

5 All photographs or illustrations should be a minimum 300 dpi at full size on the layout.

6 Your fabricator will have specific requirements. Confirm art requirements before beginning your project.

Head
Adobe Garamond Pro Regular
Small Caps
86/83
Tracking: 30
Kern as needed

HEADLINE
AND A SECOND

Sub Head
Adobe Garamond Pro Italic
58/68

Sub-head More Detail

Primary Text
Adobe Garamond Pro Regular
30/37

Lorem ipsum dolor sit amet, consectetuer adipiscing elit. Maecenas porttitor congue massa. Fusce posuere, magna sed pulvinar ultricies, purus lectus malesuada libero, sit amet commodo magna eros quis urna. Nunc viverra imperdiet enim. Fusce est. Vivamus a tellus. Pellentesque habitant morbi tristique senectus et netus et malesuada fames ac turpis egestas. Proin pharetra nonummy pede. Mauris et orci.d

Heading again. laoreet nonummy

Quote Head
Istok Web Bold
19/24

Quote
Istok Web Italic
23/25

Lorem ipsum aenean nec lorem. In porttitor. Donec laoreet nonummy augue. Suspendisse dui purus, scelerisque at, vulputate vitae, pretium mattis, nunc. Mauris eget neque at sem venenatis eleifend. Ut nonummy. Fusce aliquet pede non pede. Suspendisse dapibus lorem

Secondary Text
Istok Web
19/24

Lorem ipsum donec blandit feugiat ligula. Donec hendrerit, felis et imperdiet euismod, purus ipsum pretium metus, in lacinia nulla nisl eget sapien. Donec ut est in lectus consequat consequat. Etiam eget dui. Aliquam erat volutpat. Sed at lorem in nunc porta tristique. Proin nec augue. Quisque aliquam tempor magna. Maecenas odio dolor, vulputate vel, auctor ac, accumsan id, felis. Pellentesque cursus sagittis felis. Pellentesque porttitor, velit lacinia egestas au

Captions
Istok Web Italic
16/24

Caption for picture is this size. Pellentesque habitant morbi tristique senectus et net by Maecenas Donec

Credits
Istok Web Italic
12/12

Credit should be given to Company, by Vivamus Griffing. Courtesy of Vivamus

This is one suggestion for fonts and paragraph styles to be used when creating artwork for heritage interpretive panels.

Fonts can be purchased from Adobe Systems or its authorized dealers. See www.adobe.com/type.

IStok Web is an open source font and can be obtained from https://fonts.-google.com/specimen/Istok+Web?query=istok&selection.family=Istok+Web, or from http://signmanual.eriepittsburghtrail.org/istok-web-font/

If you are laying out heritage panel without professional assistance, be aware of common typesetting errors of beginning typesetters, including widows, orphans, poorly ragged copy, inappropriate use of foot and inch marks for apostrophes and quote marks, kerning, tracking and more.

You can find out more about these typesetting terms and other typesetting best practices in the art and design section of your library or at larger bookstores.

SUPPLEMENTAL WAYFINDING

Overview



Sign Example
Scale 3/4"=1'-0"

Supplemental wayfinding signs help trail users find trail access areas after leaving state and regional roadway systems. Typically located at intersections of local roads where the driver must make a directional decision, they include only one message, Trail Access, and an arrow pointing left, up, or right.

The sign colors are intended to relate to general roadway sign systems rather than the Erie to Pittsburgh Trail.The lettering and arrows are applied in reflective white vinyl, for good nighttime visibility.

Owners of the roadway/pathway are typically concerned about sign pollution.

Work with the owner of the roadway, pathway for agreement to place signs and their locations. To facilitate this approval it is sometimes helpful to take a picture of the existing post that is intended for use, or area where a new post is proposed and to photoshop an image of the new sign on the photo.

Also see appendix (Page 8.3) Tourist Oriented Direction Signs (TODS) for state owned roads.

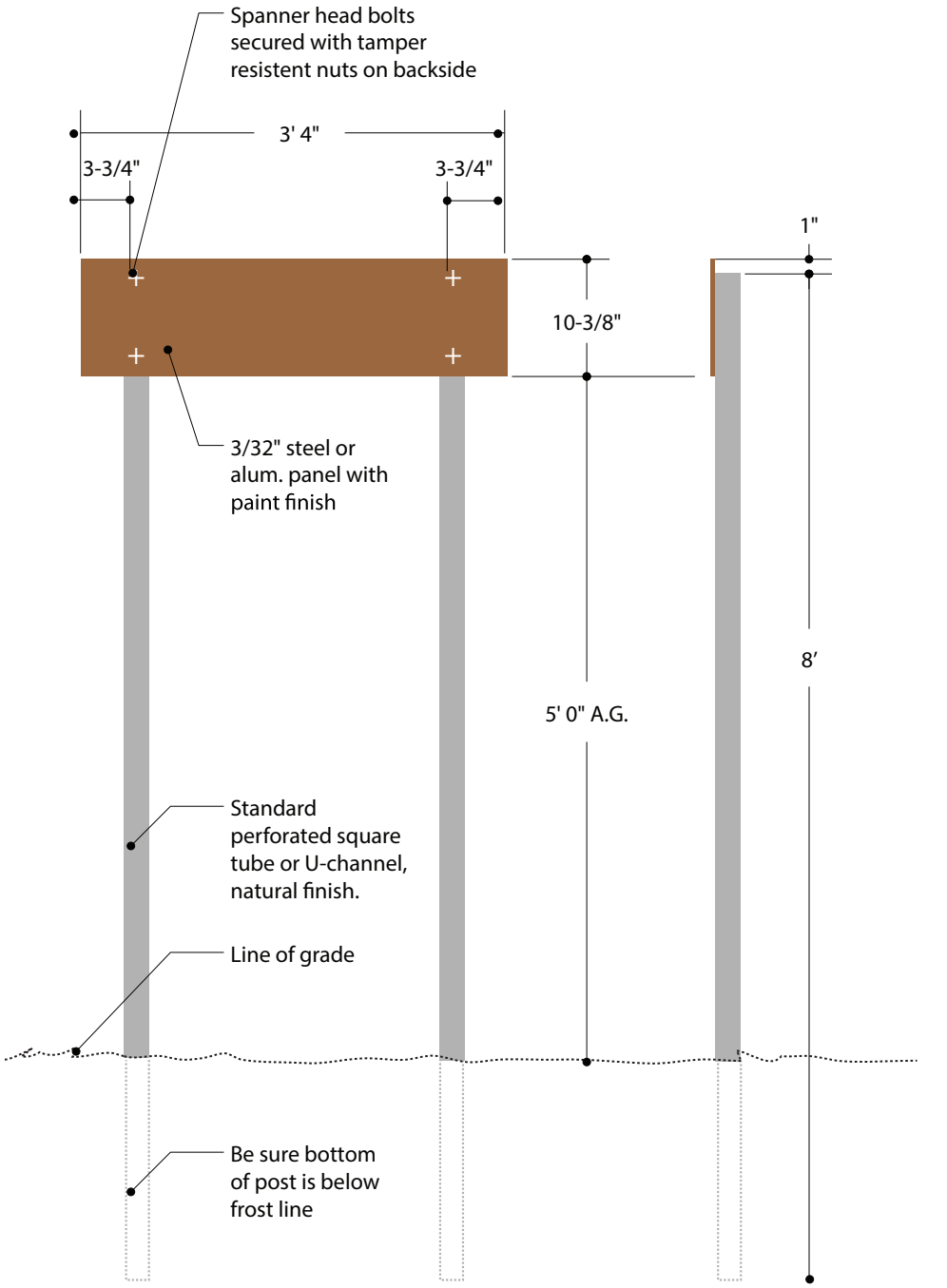

Front View, Assembly
Scale 3/4" = 1' 0"

Side View, Assembly
Scale 3/4" = 1' 0"

GENERAL NOTES

1 Sign panel is made from 3/32" or 1/8" steel or aluminum sheet, with automotive grade polyurethane enamel paint finish, or powder coated or anodized.

2 Posts are standard perforated square tubes or U-Channel used for highway signing.

3 Auger holes for posts to depth excedding frost line.

4 Set posts.

5 Attach sign panel to posts with spanner head bolts. Using tamper resistant nuts with nylon inserts on backside is recommended.

6 Backfill holes with concrete to level. Ambient moisture and rain will harden footer.

7 To facilitate mowing, the post is surrounded by a base that is at least 8 inches. It may be round or square. This base is level with the ground surface and is not covered with dirt or gravel.

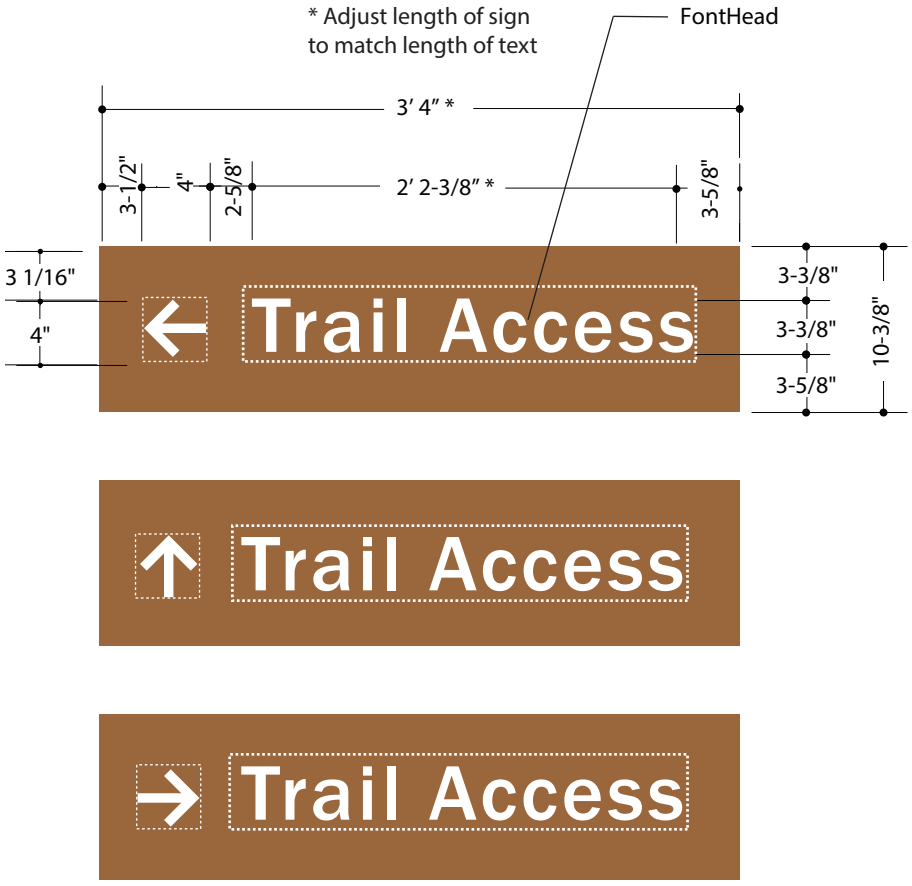

Detail: Typical Graphic Panels
Scale 1″ = 1' 0"

GENERAL NOTES

1 Graphic panels are 1/8″ aluminum sheets painted or powder coated or anodized with screen-printed graphics.

2 Attached to the plastic sign body with spanner head screws that are painted to match the graphic panel. See construction drawing for location of screws.

3. Messages outlined in dashed boxes may change.

REVERSE WAYFINDING

Overview

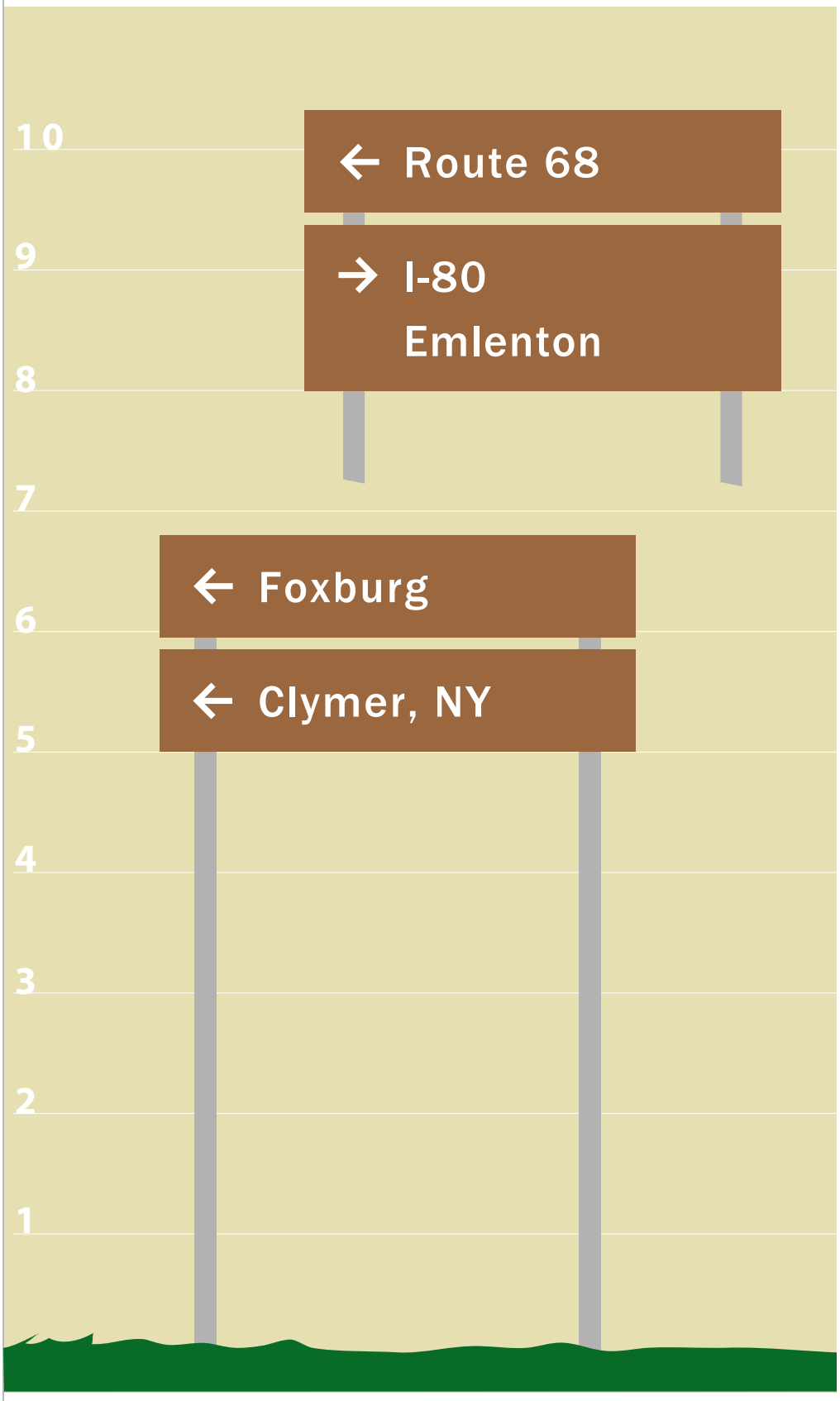

Reverse wayfinding signs help trail users get back on local roadways, going in the right direction, after they have enjoyed the trail. Typically located opposite access area parking lots, they indicate next significant town or roadways on the driver's left and on their right, or possibly ahead of them. The sign colors are intended to relate to general roadway sign systems rather than the Erie to Pittsburgh Trail. The lettering and arrows are applied in reflective white vinyl, for good nighttime visibility.

REVERSE WAYFINDING

Construction

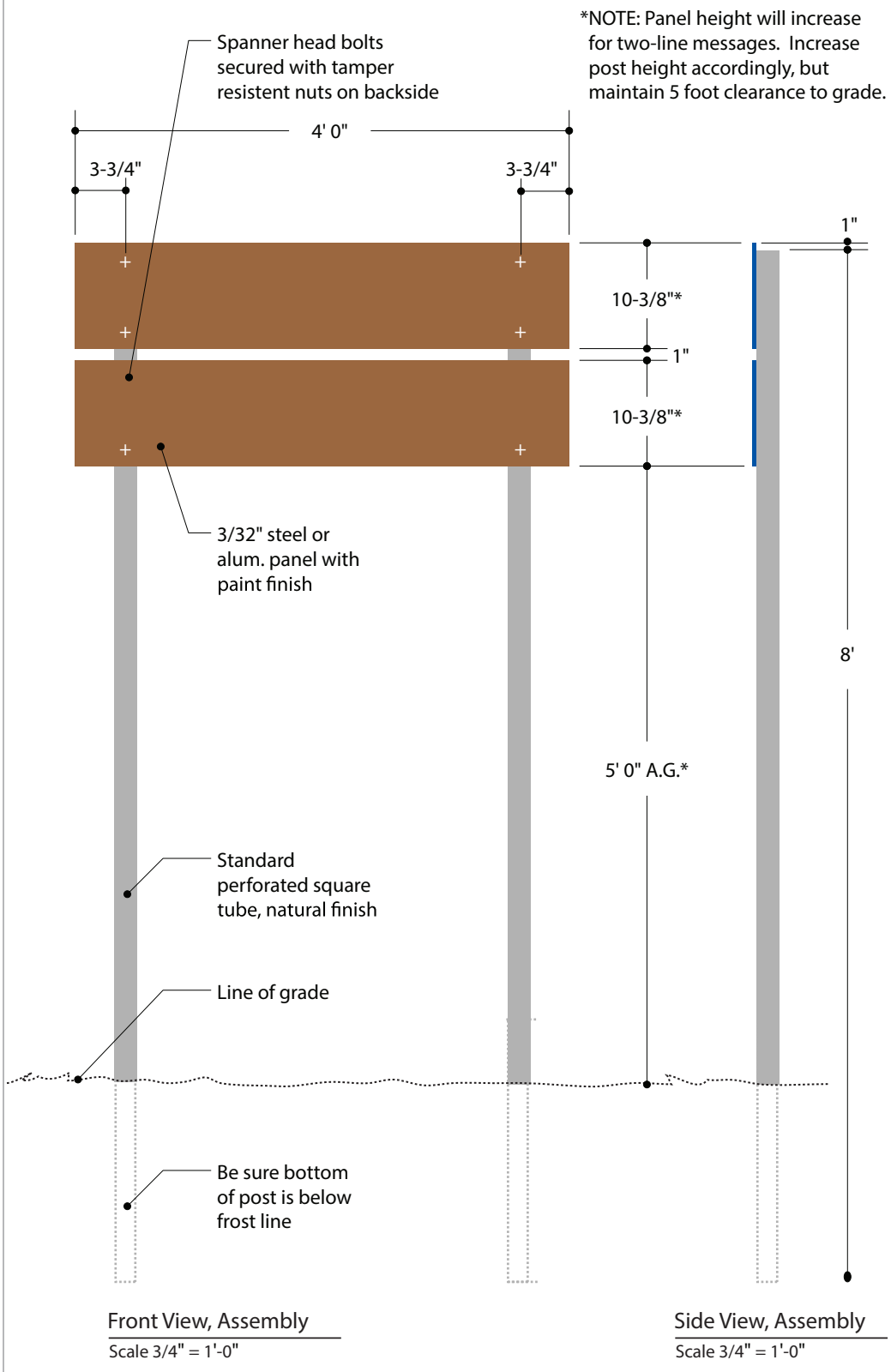

Front View, Assembly
Scale 3/4" = 1'-0"

Side View, Assembly
Scale 3/4" = 1'-0"

GENERAL NOTES

1 Sign panel is made from 3/32" or 1/8" steel or aluminum sheet, with automotive grade polyurethane enamel paint finish, or powder coated or anodized.

2 Posts are standard perforated square tubes or U-Channel used for highway signing.

3 Auger holes for posts to depth excedding frost line.

4 Set posts.

5 Attach sign panel to posts with spanner head bolts. Using tamper resistant nuts with nylon inserts on backside is recommended.

6 Backfill holes with concrete to level. Ambient moisture and rain will harden footer.

7 To facilitate mowing, the post is surrounded by a base that is at least 8 inches. It may be round or square. This base is level with the ground surface and is not covered with dirt or gravel.

REVERSE WAYFINDING
Graphic Specifications

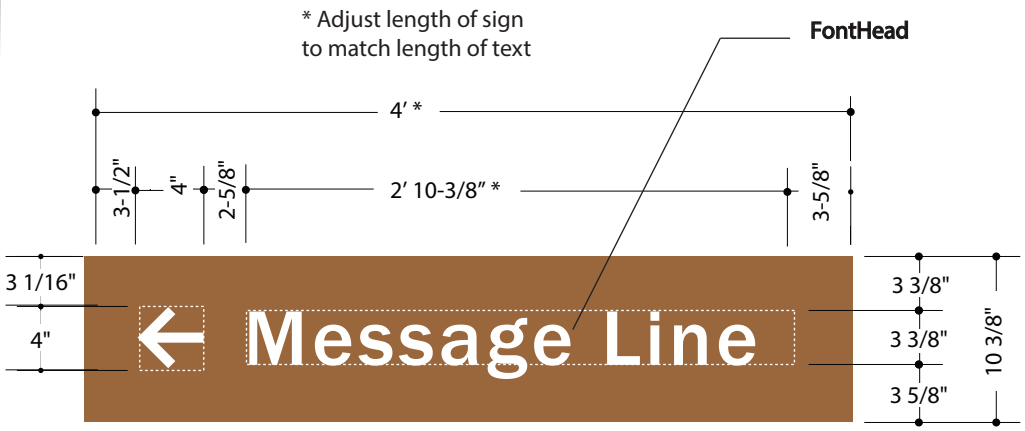

One-Line Message Panel



Split-Line Message Panel



Two-Message Panel

Detail: Graphic Layout
Scale 1"=1'-0"

GENERAL NOTES

1 Graphic panels are 1/8″ aluminum sheets painted or powder coated or anodized with screen-printed graphics.

2 Attached to the plastic sign body with spanner head screws that are painted to match the graphic panel. See construction drawing for location of screws.

3 Messages outlined in dashed boxes may change.

Erie to Pittsburgh Trail Logo Sign On State Owned Roads

PennDOT District 1 designed and approved a rectangular sign containing an oval color version of the Erie to Pittsburgh Trail logo for use when the trail is literally on a state-owned road. Other PennDOT districts have agreed to honor the same EPT design. You'll notice that it is generally modeled on the lettered bike route signs on the BicyclePA Routes.

These are actually three separate metal reflectorized signs each of which are 12" wide, use Series B font on a white background, and are generally rectangular with rounded outer corners and green borders. Starting at the top is a 6" tall compass indicator (either East, West, North, or South), then a 24" Erie to Pittsburgh Trail sign. Within the 24" sign, at the top, are the words "ERIE TO", then an 14.5" oval, then the words "PGH TRAIL". Separate at the bottom is an optional 6" auxiliary arrow (either left, right, up or special angle arrow). Color codes are PMS 307 Blue, PMS 368 Light Green, and PMS 349 Dark Green; white is standard. The metal post can be either a U-Channel or a square column with many holes.







The exact locations for each such sign post must be approved by PennDOT personnel prior to the installation, because they must take into account the distance from other existing signs and lines of vision especially for vehicle drivers. In addition, a written permit is required for each EPT sign along state-owned roads; sometimes PennDOT will cluster a group of such signs into a combined permit.

These reflectorized signs and posts will be approved only if they have been manufactured by PennDOT approved vendors, which is a much smaller number of firms than you might imagine. For the current list of approved vendors see PennDOT Bulletin #15 on the PennDOT website. http://www.dot.state.pa.us/public/pdf/BOCM_MTD_LAB/PUBLICATIONS/PUB_35/Current_Edition/Bulletin15.pdf

Signs On State Owned Roads

Within the Commonwealth of Pennsylvania, signs of all types positioned along state-owned roads are within the purview of the PA Department of Transportation, as the designated state entity to interpret and enforce the federal Manual of Uniform Traffic Control Devices (MUTCD) so that pedestrians, bicyclists, and drivers alike recognize, understand, and comply with safe, consistent signage. The New York Department of Transportation similarly handles the MUTCD in New York State.

Just because a roadway is designated with a state route number does not necessarily mean that it is a state-owned road. For example, in Oil City, Seneca Street is a state-owned road, but the parallel one-way Elm Street (which is the north-bound Business Route 8) is not state-owned. And, also in Oil City, West First Street's ownership varies by block. You can obtain information as to which roads and which blocks are state-owned by contacting the municipality in which the road exists, or by contacting the PennDOT district office.

Each PennDOT district office includes a Traffic Engineering Unit which is the full-time professional personnel who concentrate on sign positioning, policies, content, materials, periodic replacements, and related matters. This is the office which issues permits to allow new signage along state-owned roads, for instance. These employees are willing and able to advise you for those locations of the Erie to Pittsburgh Trail where EPT is along or on state-owned roadways. It is recommended that you involve these state employees in your early planning for EPT signs so that important details are included from the beginning. This participation does not imply that PennDOT will be a financial partner in the costs of producing, installing, or maintaining your resulting trail signs. In fact, PennDOT does not own, nor maintain, nor fund the EPT signs along state-owned roads.

Within the territory including the EPT, there are four state engineering districts. PennDOT District 1 serves Erie, Crawford, Warren, Forest, Mercer, and Venango counties and is located at 255 Elm Street; P. O. Box 398; Oil City, PA 16301; Traffic Engineering Unit phone (814) 678-7158; fax (814) 678-7041. PennDOT District 10 serves Armstrong, Butler, Clarion, Indiana, and Jefferson counties and is located at 2550 Oakland Avenue, Indiana, PA 15701; Traffic Engineering Unit phone (724) 357-0131; fax (724) 357-1904. PennDOT District 11 serves Allegheny, Beaver, and Lawrence counties and is located at 45 Thomas Run Road, Bridgeville, PA 15017; main phone (412) 429-5000; Traffic Engineering Unit phone (412) 429-4973, or Bike/Pedestrian (412) 429-4803; fax (412) 429-4978. New York Department of Transportation, District 5 serves Chautauqua, Cattaraugus, Erie, and Niagara counties and is located at 100 Seneca Street, Buffalo, NY 14203; main phone (716) 847-3268.

Sharrows on Paved Surfaces

Using both a system of pavement markings and signage increases visibility, and each one supplements the other to alert motorists and to guide cyclists. See page 2.3, 2.5 for standard bike route signs.

All signs and markings are to comply with MUTCD standards, PennDOT Publication 236, Publication 111, and any applicable PennDOT publication. The installation and maintenance of the approved signs and pavement markings is typically the responsibility of the municipality.

Different stencil patterns are used for marking pavements for bike use. The stencil for the dedicated bike lane differs from the stencil for the shared lane markings. Be sure to check regulations and confirm with PennDOT prior to purchasing or using a particular stencil pattern. The Shared lane stencil can be cut by a local sign maker who has been provided with the PennDOT approved design and specifications.

Figure 9C-9. Shared Lane Marking

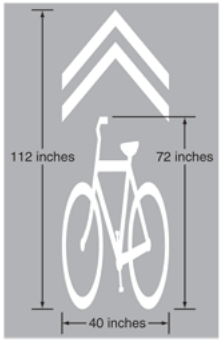

Figure 9C-3. Word, Symbol, and Arrow Pavement Markings for Bicycle Lanes

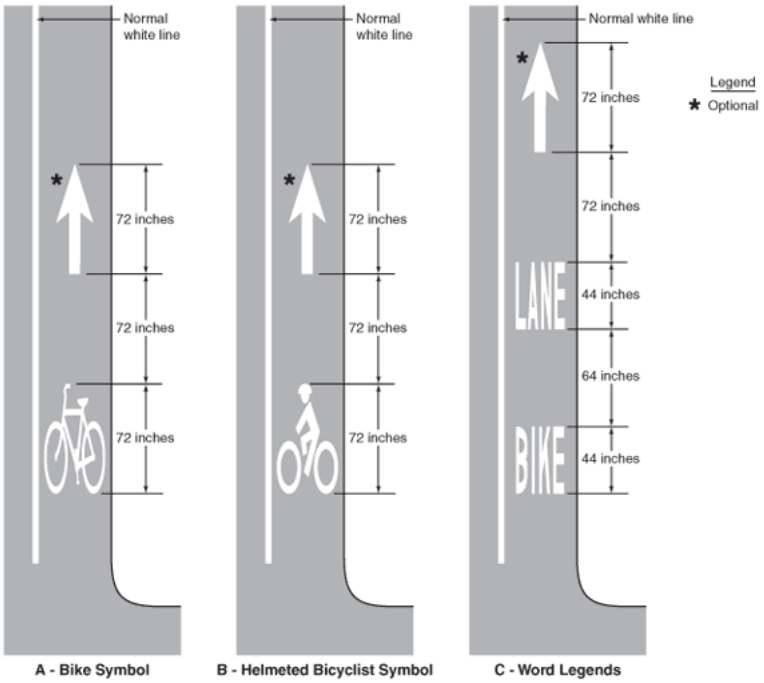

Directions for use of Sharrows on Paved Surfaces

Planning

The process for planning the installation of signs and markings within a State right-of-way is for the local municipality (or sponsor with local municipality approval) to notify the PennDOT District and supply a plan indicating the proposed locations. PennDOT will schedule a meeting to review locations and sign specifications.

The municipality can install signs and markings within their own right-of-way without PennDOT permission.

To facilitate the review/painting operation, you will want to determine where the sharrows go before you start the paint process. Do a pre-pass and mark on the curb or edge of travel lane where the sharrow will be painted. Use white paint as other colors indicates a type of underground service, done by the 811 crews (PA One Call).

Guidance for use of SMLs:

- The MUTCD recommends that Shared Lane Markings (SLMs) be reserved for roadways with posted speeds no greater that 35 mph.
- SLMs should be placed immediately after an intersection and spaced 250 feet apart or less.
- SLMs shall not be used on shoulders or in designated bike lanes. Use the Bike Lane Markings instead.
- If used in a shared lane with on-street parking, SLMs should be placed so that the centers of the markings are at least 11 feet from the face of the curb, or from the edge of the pavement where there is no curb.
- If used on a street without on-street parking that has an outside travel lane that is less than 14 feet wide, the centers of the SLMs should be at least 4 feet from the face of the curb, or from the edge of the pavement where there is no curb.
- To reduce paint wear (maintenance), place stencil between the tire wear lines using the above rules.
- Painting should be done during low traffic times after several days of warm sunny weather (to aid in paint drying).

Guidance for application of SLM stencils:

- Fill a spray painter with white line marking paint.
- Use orange cones to identify work area.
- Protect any vehicles close to the work area with a tarp.
- Using a leaf blower remove all dust and debris from the surface to be stenciled.
- Place the stencil on the pavement in accordance with guidelines noted above.
- Spray the paint into the area of the stencil that is cut out.
- Sprinkle glass beads (reflective material) over the wet paint.
- Remove stencil.
- Move all materials to the next location and repeat.
- Clean sprayer and stencil when work is complete.

Note:

- Hot-thermo applied marking is an alternative to road marking paint for marking sharrows in high traffic areas to increase wear and reduce maintenance.
- Markings will need repainted as the paint wears off.

Sign, Post and Kiosk Vendors

There is an ever changing list of sign and kiosk designers and fabricators that have been used by trail groups along the Erie to Pittsburgh Trail. Rather than list them in this printed document, the list is available on the private EPTA website at
http://signmanual.eriepittsburghtrail.org/vendors/

Each entry includes the name, sign type they produce, website address, physical address, email contact of member(s) which used or contacted them. If you know of any others, or if you have dealings with any of them, please add information by clicking the update button on that page. Update only available to authorized and logged in users.

Signs that are on state owned roads may only be fabricated by state approved vendors which is a much smaller number of firms than you might imagine. For the current list of approved vendors see PennDOT Bulletin #15 on the PennDOT website.
http://www.dot.state.pa.us/public/pdf/BOCM_MTD_LAB/PUBLICATIONS/PUB_35/Current_Edition/Bulletin15.pdf

Cost Estimates and Comparisons

Costs not yet researched.

Vertical Sign Post 16" x 6" - post of the vertical post signs
Plastic wood vs Treated Lumber

Kiosks
Professional Commercial Frames vs Treated Lumber

Heritage signs
Professional Commercial Frames vs Treated Lumber
Embedded Fiberglass panels vs Mylar appliqué

Vertical Sign Post 16" x 16" - Trail junction signs
Plastic wood vs Treated Lumber

Vertical Sign Post 4" x 4" - Special Feature Post
Plastic wood vs Treated Lumber

Tourist Oriented Directional Signs (TODS)

A TODS is a 72" X 24" or 48" X 16" reflectorized directional sign (D7-4) with white legend on blue or brown background that indicates the name of, and gives directional guidance to the participant location. As described in PennDOT Traffic Engineering Manual (Pub 46) dated March 2014, the purpose of TODS is to guide travelers to businesses, services, and participants [defined as the requesting group] in which the traveling public would have reasonable interest. The most typical example about the EPT contains the word Trail or Trailhead, an arrow, and the number of miles from that spot to the trailhead (generally 5 miles or less).

EPT fits under the Recreational category for eligible TODS, as "Hiking and Biking Trails/Routes: Areas designated for recreational hiking, biking, walking, etc. which are publicly accessible, and owned and maintained by either the Local or County government or Pennsylvania DCNR, or non-profit organizations. TODS will only be installed at locations that direct the motorist to an established trail head with parking facilities."

TODS shall be located not less than 200 feet or more than 1,320 feet in advance of a location where a turn is required from the highway. They are installed in advance of the intersection where a motorist leaves the primary highway system and at all subsequent locations where the motorist is required to turn in order to travel to the participant. All TODS should be on the right-hand side of the highway. If the participant's own sign is readily visible from the highway, do not install a TODS immediately at the final turn into parking area.

Administration of TODS is performed by the PA Tourism Signing Trust, which establishes the rates for application fees, fees for new signs and ongoing maintenance fees. To request a TODS, you [the Participant] request an application from the PA Tourism Signing Trust; www.palogo.org; (877) 272-1332; ask for Loisrae Graybill (2016). The 2016 fees including installation per sign: $75 non-refundable application fee; size 48" X 16" costs $650; 72" X 24" costs $800; and participant must pay to repair/replace TODS as needed.



Bicycle PA Routes Pennsylvania Bike Routes A, V, Y, and Z

In the 2000s, BicyclePA and PennDOT jointly created a series of bicycle routes with lettered names to cross the state via highways and rail trails. Bike Routes A, V, Y, and Z intersect or in some cases overlap with the Erie to Pittsburgh Trail. For detailed maps of the routes, see http://pennshare.maps.arcgis.com/apps/webappviewer/index.html?id=d8e1c77ad2444268bb56bd2d2a85ec46.

Route A runs north-south from Erie to the West Virginia state line; its 199 miles stretch from the Seaway Trail/BicyclePA Route Z on the Lake Erie shoreline to just north of Morgantown, West Virginia.

Route V runs east-west generally paralleling I-80. It 355 miles intersect the Erie to Pittsburgh Trail at Emlenton.

Route Y runs east-west, generally following U. S. Route 6. Its 409 miles intersect the Erie to Pittsburgh Trail at Corry.

Route Z is just 46 miles in length, entirely within Erie County; it follows the Lake Erie shoreline from the Ohio to New York borders, utilizing mostly Route 5. A portion of the Erie to Pittsburgh Trail utilizes the Seaway Trail/Route 5 in Pennsylvania and New York, although it is not presently signed to that effect.

